DG Flugzeugbau GmbH

Im Schollengarten 20 • D-76646 Bruchsal - Untergrombach • Germany
Postbox 4120, D-76625 Bruchsal • Germany
Phone 07257/8910 aircraft sales and service
Phone 07257/8911 spare part and material sales
Phone 07257/8960 repairservice
Phone 07257/89-0 switch board and management
Telefax 07257/8922 • eMail: dg@dg-flugzeugbau.de • Internet: www.dgflugzeugbau.de

F L I G H T M A N U A L

for the

M O T O R G L I D E R

DG-500M

Model: DG-500M
German Data Sheet No.: 843

Factory Serial No.: _____

Registration No.: _____

Date of Issue: November 1998

Pages as indicated by "App." are approved by:

(Signature) _____

(Authority) _____

(Stamp) _____

(Original date of approval) _____

This motorglider is to be operated in compliance with information and limitations contained herein. The original German Language edition of this manual has been approved as operating instruction according to "Paragraph 12(1) 2. of Luft-Ger Po". Approval of translation has been done by best knowledge and judgement.

0.1 Record of revisions

Any revision of the present manual, except actual weighing data, must be recorded in the following table and in case of approved sections endorsed by the responsible airworthiness authority.

The new or amended text in the revised page will be indicated by a black vertical line in the right hand margin, and the Revision No. and the date will be shown on the bottom left hand of the page.

Rev. No.	Affected pages / section	Description	Issue Date	LBA Approval Date	Inserted Date Signature
1	0.3-0.5, 2.6,4.10, 4.15,4.17	TN 843/2	Febr.92	March 04, 92	
2	0.1,0.3, 0.4,0.5, 3.4, 6.6, 6.7, 7.2, 7.7, 7.8, 8.7	TN 843/5	Sept.92	Dec.08, 92	
3	0.1,0.3, 0.4,0.5, 2.6, 2.8, 2.10, 4.12, 4.13, 5.9, 6.5, 6.9, 7.17, 7.18, 8.2, 8.6	TN 843/7	Febr.96	April 08, 96	
4	0.1,0.3,2.6	TN 843/8	March 97	05.06.97	
5	0.1, 0.5, 7.11	TN 843/11	Dec. 98	Dec. 17, 98	
6	0.1, 0.3, 0.5, 4.8, 7.14, 8.2	TN 843/16	Jan. 01	07.02.01	
Rev. No.	Affected pages / section	Description	Issue Date	EASA Approval Date	Inserted Date Signature
7	0.3-0.5, 2.8, 3.1, 3.2, 3.4-3.7, 4.1, 4.8, 4.25, 7.1, 7.16	TN 843/28 manual revision	May 2008	August 1. 2008	
8	0. , 9.1, 9.2	Special equipment for very small pilots TN500/02	May 2010	20.07. 2010	

0.2 List of effective pages

Section		page	issued	Replaced/	replaced/	replaced	replaced
0		0.0	April 89				
		0.1 -	See record of revisions				
		0.2	"				
		0.3	"				
		0.4	"				
		0.5	"				
		0.6	April 89				
1		1.1	April 89				
		1.2	Febr. 91				
		1.3	April 89				
		1.4	"				
		1.5	"				
		1.6	"				
2	App.	2.1	"				
	"	2.2	"				
	"	2.3	"				
	"	2.4	"				
	"	2.5	"				
	"	2.6	"	Febr.92/	Febr.96/	March 97	
	"	2.7	"				
	"	2.8	"	Febr.96	May 08		
	"	2.9	"				
	"	2.10	"	Febr.96			
	"	2.11	"				
3	"	3.1	"	May 08			
	"	3.2	"	May 08			
	"	3.3	"				
	"	3.4	"	Sept.92	May 08		
	"	3.5	"	May 08			
	"	3.6	"	May 08			
	"	3.7	May 08				
4	"	4.1	April 89	May 08			
	"	4.2	"				
	"	4.3	"				
	"	4.4	"				
	"	4.5	"				
	"	4.6	"				
	"	4.7	"				
	"	4.8	"	May 08			
	App.	4.9	"				

0.2 List of effective pages (cont.)

Section		Page	issued	replaced	replaced	replaced	replaced
4	App.	4.10	"	Febr.92			
	"	4.11	April 89				
	"	4.12	April 89	Febr. 96			
	"	4.13	"	" "			
	"	4.14	"				
	"	4.15	"	Febr. 92			
	"	4.16	"				
	"	4.17	"	Febr. 92			
	"	4.18	"				
	"	4.19	"				
	"	4.20	"				
	"	4.21	"				
	"	4.22	"				
	"	4.23	"				
	"	4.24	"				
	"	4.25	"	May 08			
	"	4.26	"				
5	"	5.1	"				
	"	5.2	"				
	"	5.3	"				
	"	5.4	"				
	App.	5.5	"				
		5.6	"				
		5.7	"				
		5.8	"				
		5.9	"	Febr. 96			
		5.10	"				
6		6.1	"				
		6.2	"				
		6.3	"				
		6.4	"				
		6.5	"	Febr. 96			
		6.6	"	Sept. 92			
		6.7	"	Sept. 92			
		6.8	"				
		6.9	"	Febr. 96			

0.2 List of effective pages (cont.)

Section	page	issued	replaced	replaced	replaced	replaced
7	7.1	April 89	May 08			
	7.2	"	Sept. 92			
	7.3	"				
	7.4	"				
	7.5	"				
	7.6	"				
	7.7	"	Sept. 92			
	7.8	"	" "			
	7.9	"				
	7.10	"				
	7.11	"	Aug. 90	Dec. 98		
	7.12	"				
	7.13	"				
	7.14	"				
	7.15	"				
	7.16	"	May 08			
	7.17	"	Febr. 96			
	7.18	"	"			
8	8.1	"				
	8.2	"	Febr. 96	Jan. 01		
	8.3	"				
	8.4	"				
	8.5	"				
	8.6	"	Febr. 96			
	8.7	"	Sept. 92			
9	9.1	April 89	May 10			
	9.2	May 10				

0.3 Table of contents

Section 1

1.1 Introduction

The sailplane flight manual has been prepared to provide pilots and instructors with information for the safe and efficient operation of the DG-500M motorglider.

This manual includes the material required to be furnished to the pilot by JAR Part 22. It also contains supplemental data supplied by the motorglider manufacturer.

1.2 Certification basis

This type of motorglider has been approved by the Luftfahrt-Bundesamt (LBA) in accordance with:

Airworthiness requirements:
JAR Part 22 sailplanes and powered sailplanes Change 4, issued 7th May, 1987.

Noise requirements: Chapter VI LSL (BAZ announcement issued Jan. 1st, 1989)

The Type Certificate No. 843 has been issued on February 28th, 1991.

Category of Airworthiness: Utility

1.3 Warnings, cautions and notes

The following definitions apply to warnings, cautions and notes used in the flight manual.

Warning: means that the non observation of the corresponding procedure leads to an immediate or important degradation of the flight safety.

Caution: means that the non observation of the corresponding procedure leads to a minor or to a more or less long term degradation of the flight safety.

Note: draws the attention on any special item not directly related to safety but which is important or unusual.

1.4 Descriptive data

The DG-500M is a twoplace high performance sailplane with wing flaps and retractable powerplant.

4-piece wing constructed from carbonfibre with wing flaps. The wing joint is designed with the sparend at the inner wing panel for easy rigging and that the ailerons hook up automatically.

Automatic hook ups for all controls.

Comfortable seating and modern cockpit design similar to the DG-single-seaters - safety cockpit.

Large 2 piece canopy for very good inflight vision.

Draught free canopy demist and 1 adjustable swivel air vent for each pilot.

Sealed airbrake- and landing gear box.

Retractable main wheel with large spring travel due to steel springs, nose wheel (steerable as option), tailwheel, wing tip wheels.

Controls in each cockpit - including the engine controls.

All controls including the engine are operated with the left hand, which enables the right hand to remain on the control stick.

Powerplant

Electrical engine extension-retraction, operated automatically with the ignition switch, electronical safety devices to avoid misoperation.

Engine control instruments with digital LCD indication (Microprocessor technology) in both cockpits.

Liquid cooled Rotax 535 two stroke engine with electronic dual ignition, 60 hp (44 kw) take off power.

1 handle control of the motor due to electric fuel injection instead of a choke valve.

1.4 **ff**

Belt reduction 3 : 1 and a large propeller (dia. 1.58 m, 5.18 feet) results in a low noise emission

Excellent power on performance

Further details: Waterballast and fuel tanks in the wings as options.

Technical data

wing span	22 m	72.2 ft
wing surface	18.29 m<	196.9 ft²
aspect ratio	26.5	26.5
length	8.66 m	28.4 ft
fuselage width	0.73 m	2.4 ft
fuselage height	1.00 m	3.3 ft
horizontal tailplane span	3.17 m	10.4 ft
mean aerodynamic chord MAC	0.91 m	3.0 ft
empty weight* with batteries and min. instruments	appr. 550 kg	Appr. 1210 lbs
fuselage tank	38 l	10 USgal
waterballast (option)	100 kg	220 lbs
wing fuel tanks (option)	40 l	10.6 USgal
max. TOW	825 kg	1819 lbs
wing loading (with pilot + fuel = 85 kg, 187 lbs)	ca.34.7 kg/m<	ca.7.10 lbs/ft²
max. wing loading	45.1 kg/m<	9.24 lbs/ft2

*options increase the empty weight accordingly

1.5 3 view drawing

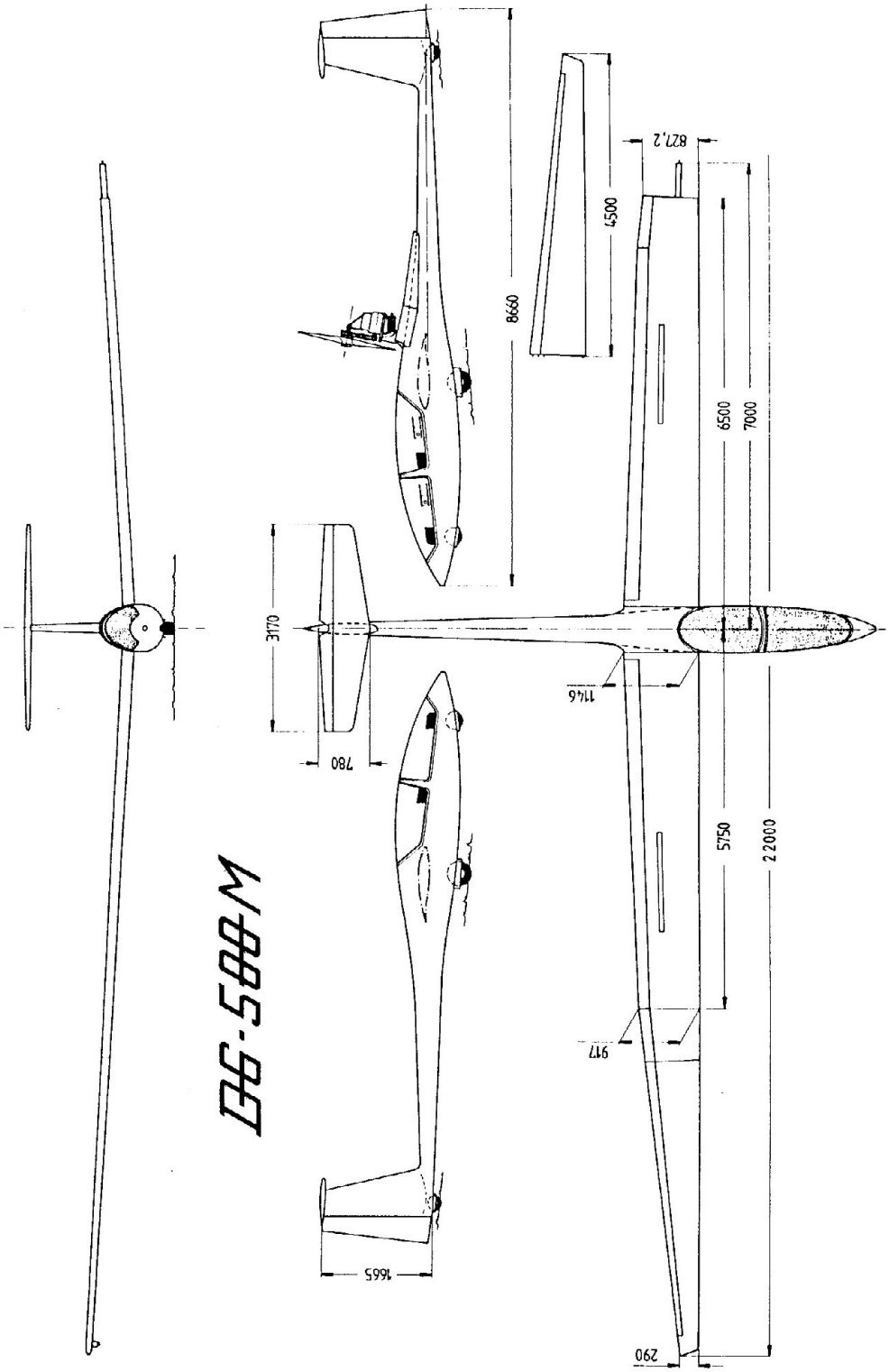

Section 2

2.1 Introduction

Section 2 includes operating limitations, instrument markings and basic placards necessary for safe operation of the motorglider, its engine, standard systems and standard equipment.

The limitations included in this section have been approved by the LBA.

2.2 Airspeed

Airspeed limitations and their operational significance are shown below:

	Speed	(IAS) km/h(kts)	Remarks
VNE	Never exceed speed flaps 0° up to -10°	270 (146)	Do not exceed this speed in any operation and do not use more than 1/3 of control deflection.
	with the engine extended	197 (106)	Do not exceed this speed with the engine extended (engine idling)
VRA	Rough air speed	197 (106)	Do not exceed this speed except in smooth air and then only with caution Rough air is in lee-wave rotor, thunderclouds etc.
VA	Manoeuvring speed	197 (106)	Do not make full or abrupt control movement above this speed, because under certain condition the sailplane may be overstressed by full control movement.
VFE	Maximum flap extended speed		Do not exceed these speeds with the given flap setting
	L = + 15°	150 (81)	
	+10°, +5°	197 (106)	
VW	Maximum winch-launching speed	140 (76)	Do not exceed this speed during winch- or auto-tow-launching
VT	Maximum aero-towing speed	197 (106)	Do not exceed this speed during aerotowing
VLO	Maximum landing gear operating speed	197 (106)	Do not extend or retract the landing gear above this speed
VPO	Max. speed to extend and re-tract the power-plant	110 (59)	Do not extend or retract the powerplant above this speed

Warning: At higher altitudes the true airspeed is higher than the indicated airspeed, so VNE is reduced with altitude see sect. 4.5.9.

2.3 Airspeed Indicator Markings

Airspeed indicator markings and their color code significance are shown below:

Marking	(IAS) range km/h	value or (kts)	Significance
White Arc	79 (43	- 197 - 106)	**Positive Flap Operating Range** (lower limit is maximum weight 1.1 VSO in landing configuration. Upper limit is maximum speed permissible with flaps extended positive + 10°, + 5°)
Green Arc	88 (48	- 197 - 106)	**Normal Operating Range** (Lower limit is maximum weight 1.1 VS1 at most forward c.g. with flaps neutral. Upper limit is rough air speed.)
Yellow Arc	197 (106	- 270 - 146)	Manoeuvres must be conducted with caution and only in smooth air.
Red Line		270 (146)	Maximum speed for all operations.
L		150 (81)	Max. speed for landing configuration L + 15°
Blue line		90 (49)	Speed of best climb Vy
Yellow Triangle		105 (57)	Approach speed at maximum weight without water ballast

2.4 Power plant

Engine manufacturer: Bombardier Rotax, Gunskirchen Austria

Engine model: Rotax 535 C

Maximum power: Take off: 44 kw (60 PS)
continuous: 44 kw (60 PS)

Max. engine RPM at MSL: Take off (max. 5 minutes): 7200 RPM
continuous: 6900 RPM

Max. cylinder head temperature (cooling water): 95°C (203°F)

Cooling liquid: Water with anti-freeze for -20°C (-4°F) for altitude flights increase anti freeze to -40°C (-40°F)

Oil for rotary valve drive: Super quality 2-stroke-oil

Propeller: Diameter 1.58 m (5.2 ft), Reduction 3:1

Manufacturer: mt-propeller Straubing W. Germany

Model: MT 158 R 125 - 1 A

2.5 Power plant instrument markings

Power plant instrument markings and their significance are shown below:

Engine speed indicator:
Centre LCD display, indication digital with 3 digits, limitation data printed above display:

Green	6900	max. continuous RPM
Yellow	6900 – 7200	caution range
Red	7200	max. take off RPM

Max. continuous RPM:
When exceeding this RPM a blinking double point appears between the second and the third digit in the display.

Max. take off RPM:
When exceeding this RPM the engine speed display starts blinking.

2.5 ff

Cylinderhead temperature indicator:
Right LCD display, indication digital with 3 digits, limitation data printed above display:

red 95 °C

When this temperature is exceeded the CHT display starts blinking.

Fuel quantity indicator (only for the fuselage tank):
Limitation data for the non usable amount of fuel printed above the display:

red 1 l

When this quantity is reached LL is displayed and this display starts blinking.

2.6 **Fuel**

Total fuel capacity:
Fuselage: 40 l (10.6 US gal.)
Wings (option) 20 l (5.3 US gal.) each

Usable amount of fuel: 39 l (10.3 US gal.)
or 78 l (20.7 US gal.)with wing tanks

Non usable amount of fuel:
Fuselage tank: 1 l (0.3 US gal.)
Wing tanks (option)0.5 l (0.15 US gal.) each

Approved fuel grades:
Car super gasoline leaded or unleaded, min.95 octane (RON)(ROZ)
or: AVGAS 100 LL (only if car super gasoline is not available)

or: mix 50% AVGAS 100 LL and 50% Car super gasoline unleaded min. 92 octane (RON)(ROZ)

mixed with self mixing Super quality two stroke oil - specifiation TSC 3 respective API TC or higher quality. Mixing ratio 1:50.

Caution: Empty the fuel tank for extended storage periods (more than 3 months). Don´t use this fuel in the glider again.

2.7 Mass (weight)

Maximum Take-Off mass:

with waterballast: 825 kg, 1819 lbs

without waterballast: W=WNLP + Wwings
WNLP = max. mass of all non lifting parts
see below
Wwings = actual mass of the wings

Maximum landing mass: 825 kg, 1819 lbs

Caution: It is recommended to dump the waterballast before landing on airfields. Dump the ballast before an outlanding in any case.

Maximum mass of all
non lifting parts = 560 kg(1235 lbs)
Maximum mass in baggage
Compartment = 15 kg(33 lbs)

Caution: Heavy pieces of baggage must be secured to the baggage compartment floor (screwing to the floor or with belts). The max. mass secured on one half of the floor (left and right of fuselage centre line) should not exceed 7,5 kg (16.5 lbs).

Maximum waterballast
in the wings = 100 kg(221 lbs)
The max. take off mass is not to be exceeded.

Warning: Follow the loading procedures see sect. 6.

2.8 Center of gravity

Center of gravity range in flight is

255 mm (10.04 in.) up to 480 mm (18.9 in.) behind datum.

Datum = wing leading edge at the rootrib

reference line = aft fuselage centre line horizontal

C.G. diagrams and loading chart see sect.6.

2.9 Approved manoeuvres

This sailplane is certified for normal gliding in the "Utility" category.
Simple aerobatics are approved but only without waterballast and with the engine retracted.
The following aerobatic manoeuvres are approved see sect. 4.5.12:

Manoeuvre	recommended entry speed IAS km/h	kts.
Spins	/	/
Inside Loop	200	108
Lazy Eight	200	108
Chandelle	200	108

2.10 Manoeuvring load factors

The following load factors must not be exceeded:

at manoeuvring speed	VA + 5.3	-2.65
at max. speed	VNE + 4.0	-1.5
airbrakes extended	VNE + 3.5	
wingflaps in landing position	VFE + 4.0	

2.11 Flight crew

a) single seated
max. load in the front seat 110 kg 242 lbs.
min. load in the front seat see placard in cockpit and weighing report page 6.5
b) two seated
max. cockpit load is 210 kg (463 lbs.) with a max. of 105 kg (231 lbs.) in the front seat or 110 kg (242 lbs.) in the front seat and 90 kg (198 lbs.) in the rear seat.
min. cockpit load in the front seat is the min. cockpit load see a) minus 40% of the load in the rear seat. This means that 10 kg (22 lbs.) in the rear seat replaces 4 kg (8.8 lbs.) missing cockpit load in the front seat.
With these loads, the C.G. range given under 2.8 will be kept in the limits if the empty weight C.G. is in its limits. see loading chart in sect. 6.
Either the front seat or the rear seat may designated as seat of the pilot in command.
If the rear seat is to be designated it must be assured that all necessary operating items and instruments are installed and that the pilot in command has sufficient training in flying safely from the rear seat.

Caution: With lower pilot weights lead ballast must be added to the seat. Ballast put on the seat (lead ballast cushion) must be fastened at the safety belt anchorage points. Installation for removable trim ballast see sect. 7.16.1.

Note: For Australia the lower limit for the min. load in the cockpit should not exceed 66 kg (146 lbs.). A provision for removable ballast see sect. 7.16.1 is mandatory.

2.12 **Kinds of operation**

A) **With waterballast**

1. Flights according to VFR (daylight)
2. Self launching
3. Aerotow
4. Winch- and auto-launching

B) **Only without waterballast and with the engine retracted**

1. Cloud flying (daylight): permitted when properly instrumented (see below).
2. Simple aerobatics see sect. 4.5.12.

Note: Cloud flying is not permitted in the USA, Canada and Australia.

2.13 **Minimum equipment**

As minimum equipment only the instruments and equipment specified in the equipment list (see maintenance manual) are admissible.

Note: The actual equipment list is filed in the enclosures of the maintenance manual.

a) **Normal operation**

Airspeed indicator
Range: 0-300 km/h (0-165 kts)
Speed range markings see sect. 2.3

Altimeter
Range 0-10000 m (33000 ft) or 12000 m (40000 ft)
Altimeter with fine range pointer, 1 turn max. 1000 m (3000 ft.)

Magnetic compass (compensated in the aircraft)

Four piece symmetrical safety harness VHF - transceiver (ready for operation) with noise absorbing earphones

Engine speed indicator

Fuel quantity indicator

Cylinder head temperature (water temperature) **indicator**
These 3 indicators are incorporated in the DEI. Markings and display of the limitations see sect. 2.5.

Engine elapsed time indicator (counts as long as the engine is running)

Rear view mirror

Parachute automatic or manual type or a back cushion approximately 8 cm (3 in.) thick.

Required placards, check lists and this flight manual

b) **In addition for cloud flying** (Not permitted in the USA, Canada and Australia)

Variometer

Turn and bank indicator

Remark: Experience has shown that the installed airspeed indicator system may be used for cloud flying.

2.14 Aerotow, winch and autotow launching

2.14.1 Weak links

10 000 N ± 10%
2 200 lbs ± 10%

2.14.2 Length of the towing cable

for aerotow 30-70 m (100 - 230 ft) Material: hemp- or plastic fibres

2.14.3 Max. towing speeds

Aerotow	VT = 197 km/h,	106 kts
Winch- and autotow	VW = 140 km/h,	76 kts

2.14.4 Tow Release

The C.G. tow release (installed in front of the main wheel) is suitable only for winch- and auto launching.

The nose hook is to be used only for aerotow.

2.15 Crosswinds

The demonstrated crosswind velocity is 15 km/h (8 kts) according to the airworthiness requirements.

2.16 Tyre Pressure

Main wheel	3.0 bar	44	psi
Nose wheel	2.5 bar	36	psi
Tail wheel	4.0 bar	58	psi

2.17 Waterballast

Max. capacity 50 l (13.2 U.S. gal.) per wing. Filling the water ballast is only allowed with a filling system which enables determination of the exact amount of ballast filled, e.g. water gauge or calibrated canisters. Only symmetrical loading is allowed.
After filling, balance the wings by dumping enough water from the heavy wing. Flight with leaking watertanks is prohibited, as this may result in asymmetrical loading condition.
Warning: Follow the loading chart, see sect. 6.8. The max. take off weight must no be exceeded.

2.18 Wing fuel tanks (Option)

Max. capacity 20 l (5.3 U.S.gal.) per wing Don't park the DG-500M over night with fuel in the wing tanks.

2.19 **Limitations placards**

DG Flugzeugbau GmbH

type: DG-500 M Year of Consruction:
serial no: 5 E M

Maximum airspeeds	km/h	Kts.
Winch launch	140	76
Aero-tow	197	106
Manoeuvring V_A	197	106
Rough air	197	106
Max. flap extended speed +10°, +5°		
Extended powerplant	197	106
Langing gear operating	197	106
Maximum speed V_{NE}	270	146
Max. flap extended speed L	150	81
Retraction and extension of the powerplant	110	59

Approved aerobatic manoeuvres (only without ballast in the wing):
Pos. Loop, Chandelle, Spin

Maximum mass: 825 kg (1820 lb.)

L o a d i n g c h a r t

Cockpit load (parachute included)

	front seat		rear seat	
maximum	110 kg	242 lbs	90 kg	198 lbs
or maximum minimum	105 kg	231 lbs	105 kg	231 lbs

Cockpit Check
1. Lead ballast (for under weight pilot)?
2. Parachute worn property?
3. Safety hamess buckled?
4. Front seat: pedals adjusted?
   Rear seat: seating height adjusted?
5. All controls and knobs in reach?
6. Altimeter?
7. Drive brakes cycled and locked?
8. Wing flaps in take off position?
9. Positive control check ? (one person at the control surfaces).
10. Trim?
11. Canopy locked?
    Additional checks before self launching
12. Fuel level
13. Canopy open – propeller clear?
14. After starting the engine – close canopy.
15. Check magnetos.
16. Check engine RPM.

Sollbruchstelle	10000 N
rated load	2200 lbs

Gepäck max.	15 kg
Baggage max.	33 lbs.

Reifendruck	2,5 bar
Tyre pressure	36 psi

nose wheel

Reifendruck	3 bar
Tyre pressure	44 psi

main wheel

Reifendruck	4 bar
Tyre pressure	58 psi

tail wheel

Altitude	m	0-2000	3000	4000	5000	6000
VNE	km/h	270	256	243	230	218
Altitude	ft.	0-6600	10000	13000	16000	20000
VNE	kts.	146	138	131	124	117

Other cockpit placards see sect. 7.

3.1 Introduction

Section 3 provides a checklist and amplification for coping with emergencies that may occur. Emergency situations can be minimized by proper preflight inspections and maintenance.

Caution: Canopy jettison and bailing out should be trained several times on the ground before flying the aircraft.

3.2 Canopy jettison

To bail out the white-red canopy opening handle (left) has to be operated with your right hand. Open the canopy as far as possible.
If the canopy doesn't stay open (or is not blown away by the oncoming air), but is closed by the air pressure, you have to release the canopy in it's closed position by operating the red emergency release handle (right) with your left hand, then push the canopy upwards.

The retaining lines will tear off.

The gas struts (if installed) will disengage automatically.

3.3 Bailing out

First jettison both canopies, then open the safety harness and bail out.
The low walls of the front cockpit allow for a quick push-off exit.

Warning: If bailing out with the engine running it is necessary to switch off the ignition and retract the engine with the manual switch even with the propeller still turning. The propeller will be stopped by the engine doors. Don't try to stop the propeller vertical and to retract the engine using the normal method.

3.4 Stall recovery

Easing the stick forward and picking up a dropping wing with sufficient opposite rudder the glider can be recovered from the stall.
To recognize and prevent the stall, please refer to sect. 4.5.4.

3.5 Spin Recovery

Apply full opposite rudder against direction of the spin, pause.
Then ease stick forward until the rotation ceases, centralize the controls and carefully pull out of the dive.

The ailerons should be kept neutral during recovery.

3.5 ff.

Caution: To prevent unintentional spinning do not stall the sailplane. Fly with enough speed reserve especially in gusty conditions and in the landing pattern.
Intended spins with waterballast are not permitted.

Height loss during recovery	up to.	50-100 m	(165-330 ft)
max. speed during recovery		200 km/h	(108 kts.)

3.6 **Spiral dive recovery**
Apply rudder and aileron in opposite direction and carefully pull out of the dive.

Spiral dive occurs only when spinning more than 2 turns with medium C.G. positions, see sect. 4.5.12.

To prevent spiral dives intentional spinning should only be executed at the C.G. positions specified in section 4.5.12 without waterballast.
Recovery from unintentional spinning should be done immediately.

3.7 **Recovery from unintentional cloud flying**
Spins are not to be used to loose altitude. In an emergency, pull out the dive brakes fully before exceeding a speed of 200 km/h and fly with max. 200 km/h (108 kts.) until leaving the cloud.
At higher speeds up to VNE, pull out the dive brakes very carefully because of high aerodynamic and g-loads.

3.8 Engine failure

3.8.1 Power loss during take off

Push the control stick forwards immediately, watch the airspeed indicator!

Sufficient runway
- land normally straight ahead with engine extended
- flaps L
- airbrakes as desired

Insufficient runway
- decision based on position, terrain and height
- close fuel cock, switch off ignition and main switch
- engine extended reduces L/D to 15!

3.8.2 Power loss during flight

Push the control stick forward immediately, watch the airspeed indicator!
Check
- fuel cock position?
- fuel quantity?

If no change, retract the engine or land with extended engine.

3.9 Fires

3.9.1 In engine on the ground

- close fuel cock and switch off ignition if the engine is still running
- keep engine extended
- switch off main switch
- use extinguisher, cloth or suitable external means to fight the fire

3.9.2 In engine in flight

- close fuel cock
- open throttle fully if engine is still running until engine stops
- switch off engine master switch
- land as soon as possible
- extinguish fire

3.9.3 In the fuselage in flight

3.9.3.1 Front fuselage (electrical fire)

- switch off main switch
- close ventilation, open swivel air vents and side window
- land as soon as possible if the fire is not extinguished (circuits are effectively protected by circuit breakers)

3.9.3.2 Rear fuselage (engine)

- close fuel cock
- open throttle fully if engine is still running until the engine stops
- keep engine extended or extend the engine
- switch off engine master switch
- if smoke prevents flying open ventilation
- land as soon as possible
- extinguish fire

3.10 **Loss of electrical power in flight**

3.10.1 With the engine retracted: Continue flying as a sailplane.

3.10.2 With the engine extended not running:
Look for a landing field to do a safe outlanding.

3.10.3 With the engine extended and running:
Don't stop the engine. Fly to the next airfield and land with the engine running.
The mechanical fuel pump and the coolant pump are driven directly by the engine to allow engine operation without battery power.
Avoid longer sinking flights with the engine idling as lubrication of the engine will be insufficient.
Therefore stop the engine for the landing or apply some throttle at least every 60 seconds to supply oil to the engine.
Landing with the engine extended see sect. 3.13.

3.11 **Starting the engine with the starter not working:**
In flight:
Extend the engine by switching on the ignition, when engine is extended increase speed as quickly as possible to approx 170 km/h (92 kts.) until the engine starts. Then flare out with max. 2 g. From the beginning of the dive to the lowest point of the procedure you need appr.150 m (500 ft). Therefore you should not start this procedure below 400 m (1320 ft) above ground. Otherwise a safe outlanding is preferable.

On the ground:
Handstarting the engine is not possible as you don't reach the necessary starting RPM.

You may carry out an aerotow and airstart the engine see above.

3.12 Retraction or extension of the power plant with the normal mechanism not working

Extend or retract the power plant via the manual switch on the right side console see sect. 7.3 item 24.

This procedure is only to be followed in an emergency as all safety devices (e.g. against retraction of the engine while running) are by-passed.

3.13 Landing with the engine extended and stopped

Wing flap setting +10° or L
Landing with the engine extended and stopped is not a potential risk.
However due to the high drag from the extended engine, the approach should be made not using airbrakes fully extended.
Fully extended airbrakes may result in a heavy and uncomfortable landing.
It is recommended to approach somewhat faster than usual.

3.14 Flight with asymmetric waterballast

If you suspect that the waterballast does not dump symmetrically you have to close the dump valves of the wingtanks immediately, to avoid greater asymmetry.
Asymmetry can be verified by the necessary aileron deflection in straight flight at low airspeeds.
When flying with asymmetric waterballast you have to increase the airspeed, especially in turns, so that you can avoid a stall at all costs.
If the aircraft does enter a spin, you have to push the stick forward clearly during recovery.
Fly the landing pattern and touch down approx. 10 km/h (6 kts.) faster than usually and after touch down control carefully the bank angle to avoid the wing touching the ground too early.

3.15 Emergency wheel up landing

It is not recommended to execute a wheel up emergency landing, as the energy absorption capability of the fuselage is much smaller than that of the landing gear.
If the landing gear can't be extended use wing flap setting L and touch down with small angle of attack.

3.16 Emergency ground loop

If there is the risk of overshooting the landing strip you have to decide at least 40 m (130 ft) before the end of the field to execute a controlled ground loop.
If possible turn into the wind, lift the tail by pushing the stick forward.

3.17 Emergency landing on water

From the experience with emergency water landing we know, that it is likely that the sailplane will dive into the water, cockpit first.

Therefore an emergency landing on water should be the last choice.
In the case of a water landing, however, extend the landing gear.

Recommended procedures:

On downwind leg of the landing pattern:	Extend the landing gear, unlock the parachute harness (not the seat harness)
Touch down:	With landing gear extended and airspeed as low as possible.
At point of touch-down:	Use your left arm to protect your face against possible canopy fracture.
After touch down:	Unfasten seat belt harnesses and undo parachute.
Leaving the cockpit under water:	If the canopy has not fractured, opening the canopy may be possible only after the forward fuselage is almost completely filled with water.

Section 4

4.1 Introduction

Section 4 provides checklist and amplification procedures for the conduct of normal operation. Normal procedures associated with optional systems can be found in section 9.

4.2 Rigging and derigging, filling the watertanks, refuelling

4.2.1 Rigging

1. Open the rear canopy.

2. Clean and lube the pins, bushings and the control connections.

3. Rigging the inboard wing panels.
   All controls hook up automatically. Therefore set the wing flap handle into zero position and the airbrake handle to the forward stop. The airbrakes must be locked. Screw one of the rear wing securing pins on the tool W 38/2. Close the rear canopy. Push the right wing panel into place. Insert the rear securing pin with the tool at the rear attachment fitting. Push in the tool so far that the upper surface of the brass part of the tool is flush with the wing surface. Screw off the tool. Check if the locking device for the securing pin has engaged. Screw the other securing pin on to the tool.
   Open the rear canopy. Push in the left wing. Mount and check the left securing pin by the same method as the right side. Push in the two main pins as far as possible. Place the handles horizontal or upright. Release the wings. Finally screw in the securing screws in the main pins. When the screws are fastened press the handles of the screws into the clips at the main pin handles.

4. Rigging of the outboard wing panels.
   First rig the right outboard panel. Take care that the two pins of the aileron engage into the bushes of the inboard aileron.
   Push the securing device of the main pin upwards with the tool W 38/1, then push the main pin forwards as far as possible. When taking away, the tool, the securing device must engage, see sketch.

4.2.1 **ff**

The sheet metal plate of the securing device must be flush with the vertical pin of the main pin

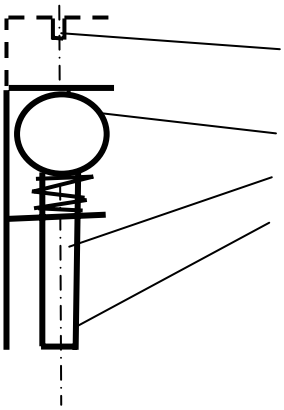

Rig the left outboard panel accordingly.

5. Rigging of the stabilizer
   Set the trim **nose down.**
   Screw the tool W 38/2 into the securing plate (near the top of the left surface of the fin). Pull out the securing with the tool, move it downwards to engage in the rigging position. Set the stabilizer on, so that the roller at the fuselage side push rod is inserted into the funnel at the elevator.

   Watch carefully the procedure.

   When the stabilizer is set down and slide forward in the funnel if you hold the elevator in the pertinent position.

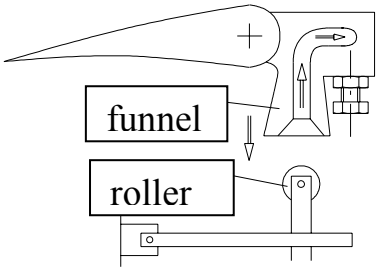

   Release the securing device by pulling out with the tool and engage the securing device by lifting the tool. The securing plate must be flush with the surface of the fin. Screw out the tool.

   Check for correct elevator connection by looking from the rear into the gap at the right hand side of the rudder.

6. Tape the gaps of the wing-fuselage junction and at the wing joint.

7. Positive control check.

4.2.2 **Filling the wing water ballast tanks** (Option)

To fill the water ballast, pull back the lever (top-right tank, bottom-left tank) in the cockpit.

Place one wingtip on the ground. Attach the hose supplied with your glider in the water outlet on the lower surface of the wing.

Warning: Fill the hose from your water containers but never from a mains pressure water supply. Filling the wing tanks with excessive pressure (more than 0.2 bar, 3 psi) will definitely burst the wing shell!

Caution: If the tanks are to be filled up completely you must suck the air out of the tanks with the filling hose.

Fill with the desired amount of water regarding the loading chart see sect. 6. After filling close the valve with the water ballast lever and remove the hose. Place the other wingtip on the ground and fill the other tank.

In case a valve leaks slightly, you may try to pull out the PVC pushrod of the valve to stop the leak. If this cannot be done successfully refer to maintenance manual 1.8.2. and 4.1.

It is not allowed to fly with leaking watertanks,as this may result in asymmetrical loading condition.

After filling the tanks, check to see if the wings are balanced. If one wing is heavier, dump enough water to balance the wings.

4.2.3 Filling the Fueltanks

4.2.3.1 Fuel is transfered from a can where the correct amount of oil is added and mixed prior to filling.

4.2.3.2 Use only super two stroke oil.

4.2.3.3 The best method is to transfer the mixed fuel from the can into the fuselage tank with an electric fuel pump and filter. It is recommended always to carry this pump system on board. The pump system is available from
DG Flugzeugbau. The power supply socket is located in the rear cockpit - note the master switch has to be switched on.

4.2.3.4 Filling the wing fuel tanks (optional) can only be done using the above mentioned electric pump system.

1. Close the wing tank valves in the fuselage.

2. Attach the quick connector of the pump system to its suction side hose and connect it to the wing fuel tank and pump the air which may be in the tank out for about 1 minute.

3. Reverse the connections and fill the wing tank.

4. After filling the wing tank connect the fuselage connector to the wing connector.

4.2.3.5 In case there is no can available for premixing the fuel and oil for filling the wing tanks, the fuselage tank can be used. Transfer approx. 5 litres of fuel into the fuselage tank, pour in the oil and then fill the tank completely with fuel. Then fill the wing tanks from the fuselage tank then.

4.2.4 Derigging

Derigging follows the reverse of rigging.
Water ballast and fuel tanks in the wings must first be emptied. Fuel in wing tanks can be simply transfered to the fuselage tank or emptied directly using the pump system (see 4.2.3.3) in reverse.
Disconnect the connectors for the wing fuel tanks (optional).
Lock the airbrakes.
For disassembling the securing pins of the wings the tool W 38/2 must be screwed into the bolt completely.
The brass part of the tool will then disengage the securing of this bolt.
It is recommended to leave the securing bolt in the right wing as long as you derig the left wing.

4.3 Daily Inspection

Please keep in mind the importance of the inspection after rigging the glider and respectively each day prior to the first take off. It is for your safety.

Caution: After a heavy landing or if other high loads have been subjected to your sailplane, you must execute a complete inspection refering to maintenance manual sect. 2.3 prior to the next take off. If you detect any damage, don't operate your aircraft before the damage is repaired. If the maintenanceand repair manual don't give adequate information, please contact the manufacturer.

A Inspection prior to rigging

1. Wing roots and spar ends
a) check for cracks, delamination etc.
b) check the bushes and their glued connection in root ribs and the spar ends for wear
c) check the control hook ups at the rootrib for wear and corrosion
d) check the strings which hold the waterbags for sufficient tension (see maintenance manual sect. 4.1)
2. Fuselage at wing connection
a) check the lift pins for wear and corrosion
b) check the control hook ups including the waterdumpsystem for wear and corrosion
3. Top of the vertical fin
check the mounting points of the horizontal tailplane and the elevator control hook up for wear and corrosion
4. Horizontal tailplane
check the mounting points and the elevator control hook up for wear and corrosion
5. Rigging points for the outboard wing panels
Check the lift pins and bushes for wear and corrosion and check their glued connections. Check the securing device of the main pin for function and enough spring force.

B Inspection after rigging

Walk around the aircraft

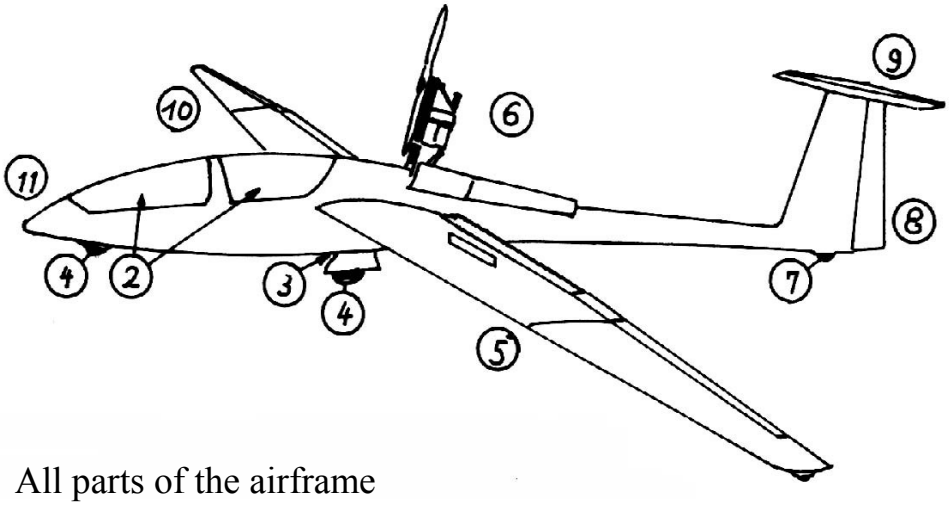

1. All parts of the airframe
   a) check for flaws such as bubbles, holes, bumps and cracks in the surface
   b) check leading and trailing edges of the wings and control surfaces for cracks
2. Cockpit area
   a) check the canopy locking mechanism
   b) check the canopy emergency release see sect. 7.15 (not each day, but min. every 3 month)
   c) check the main pin securing
      check the securing ropes of the headrest in the rear cockpit for wear and function and length: is it possible that the headrest interferes with the control stick?
   d) check all controls for wear and function, incl. positive control check
   e) check the tow release system for wear and function incl. cable release check
   f) check for foreign objects
   g) check the instrumentation and radio for wear and function
   h) check the brake fluid level
   i) check the fuel filter for dirt and sludge
   j) check the engine controls
   k) check all fuses including the battery fuse
   l) check the extension-retraction mechanism by operating it in both directions. The extension time should not exceed 13 seconds!
      Note: If the mechanism can't be operated with the ignition switch or with the manual switch, check the circuit breaker.
   m) extend the engine with the manual switch

4.3 **B ff**

3. C.G. Tow hook
   a) check the ring muzzle of the C.G. hook for wear and function
   b) check for cleanliness and corrosion
4. Main landing gear and nose wheel
   a) check the struts, the gear box, the gear doors and the tyre for wear; dirt in the struts can hinder the landing gear from locking over center the next time!
   b) check the tyre pressure
      mainwheel: 3.0 bar - 44 psi
      nose wheel: 2.5 bar - 36 psi
   c) check wheel brake and cable for wear and function
5. Left wing
   a) check locking of the outboard wing
   b) check the aileron for excessive free play
   c) check the wing flaps for excessive free play
   d) check airbrake- and box and control rod for wear and free play. It must be possible to retract the airbrake, even if it is pressed in backward direction. If there is any water in the airbrake box this has to be removed.
   e) check the locking of the rear wing attachment pin
6. Power plant checks
   a) all screwed connections and their securing
   b) function of throttle and propellerbrake
   c) ignition system incl. wires and the spark plug connectors for tight fit
   d) toothed belt for wear and correct tension, sudden loss of tension indicates damage of the engine assembly see item h)
   e) engine restraining cables and their connections in the engine compartment
   f) fuel lines, electrical wires, bowden cables and structural parts for wear and kinks
   g) exhaust muffler, intake muffler, engine mount and accessories for tight fit and any cracking, intake opening screens of intake muffler for dirt.
   h) apply strong forward pressure to the propeller mount, to check if the bolted connection between the propeller mount and the engine block are loose or damaged.
      Check the mounting points of the two GFRP struts for free play. No free play is allowed.

4.3 **B ff**

i) check cooling liquid level, refill if necessary

Warning: The hose clamp which secures the cap of the cooling liquid reservoir must be mounted so that the screwed joint is in the front to prevent the engine retaining cables catching the screwed joint.

j) check the oil level for rotary valve drive

k) cooling liquid and oiling system for leaks

l) visual check of the propeller

m) turn the propeller 1 revolution by hand listen for abnormal sounds which may indicate engine damage

n) fuel level

o) drain condensed water from the fuel tank. The drainer is located in the main wheel box on the rear wall on the right hand side.

7. Tail wheel

a) check for wear, free play and excessive dirt in the wheel box. Remove excessive dirt prior to take off!

b) check tyre pressure: 4 bar -58 psi

8. Rear end of the fuselage

a) check the lower rudder hinge and the connection of the rudder cables for wear, free play and correct securing

b) check the bulkhead and fin trailing edge shear web for cracks and delamination

9. Fin - horizontal tail

a) check the upper rudder hinge for wear and free play

b) check the elevator for free play and correct control hook up, look from the rear into the gap at the right hand side of the rudder

c) check the securing of the stabilizer

d) check the horizontal tail for free play

e) check the TE or Multiprobe for correct insertion

10. Right wing see detail 5.

11. Fuselage nose

a) check the ports for the static pressure and the pitot pressure for cleanliness.

b) if the sailplane was parked in rain, you have to empty the static ports by sucking out the water at the ports.

c) check the nose hook for cleanliness and corrosion

4.4 Preflight inspection

1. Lead ballast (for under weight pilot)?
2. Parachute worn properly?
3. Safety harness buckled?
4. Front seat: pedals adjusted? Rear seat: seating height adjusted?
5. All controls and knobs in reach?
6. Altimeter?
7. Dive brakes cycled and locked?
8. Wing flaps in take off position?
9. Positive control check? (One person at the control surfaces).
10. Trim?
11. Both canopies locked?

Additional checks before self launching

12. Fuel level
13. Canopy open - propeller clear?
14. After starting the engine - close canopy.
15. Check magnetos.
16. Check engine RPM.
17. Check the fuel flow.

15. - 17. see sect. 4.5.1

4.5 Normal procedures and recommended speeds

4.5.1 Engine starting, taxiing procedures

4.5.1.1 Engine starting on the ground

a) Switch the ignition off in the front DEI, but switch it on in the rear DEI.
b) Main switch on.
c) Switch on DEI to Avionik + engine.
d) Extend the engine with the manual switch on the right side console in the front cockpit. Therefore lift the right cover and press the switch to the front until the extension motor stops. Release the switch and put down the red cover again.
Note: If you cannot extend the engine, check the circuit breaker first. Otherwise see sect. 8 trouble shooting.
e) Check if the control light "engine extended" is on.
f) Turn the propeller min. 1 turn by hand.
g) Switch on the ignition in the front DEI (note: the toggle has to be pulled out for switching). With both ignition switches "on" the control light "ignition on" must be on. Listen if you can hear the electrical fuel pump. If you don't hear the pump, it may be defective and you shouldn't try to start the engine.
h) Check if the switch for the primer is on "auto" position.
i) Pull the throttle back to closed position with cold engine and low OAT. Otherwise push the throttle in approximately 1-2 cm (0.4-0.8 in).
j) Check that the propeller is clear.
k) Push the starter button until the engine runs.
When starting with cold engine the red control light near the primer switch must be on. After starting the light must go out, see also sect. 4.5.1.2.
l) As soon as the engine runs, move the throttle forward.
m) Adjust the engine RPM to approx.3000 and check the ignition circuits (magnetos), but not before the engine runs smooth.
n) Check full engine RPM (wheel brake closed). Min. 6600 RPM.
o) Check the fuel flow. With the engine running at full throttle switch over to "Avionik" (thereby the electric fuel pump is switched off). Only a short drop in engine RPM is acceptable, otherwise you should not take off. The fuel filter is too dirty and should be replaced . See maintenance manual sect. 3.5.1 point 4.

4.5.1.2 **Starting problems**

a) The engine is equipped with an electric fuel injection (primer) instead of a choke valve. The automatic control of the primer enables engine starting with little risk of misoperation.
To inspect the correct functions of the primer there is a control light in the front instrument panel which shines as long as fuel is injected (primer valve open). With a cold engine also after releasing the starter button fuel will be injected. The duration of the injection is dependent on the cooling water temperature. With cooling water CHT above 38°C (100°F) no fuel will be injected during engine start.

If the engine will not fire or if the automatic control is defective it is possible to control the primer valve manually via the switch located next to the control light.

With position "on" fuel will be injected as long as the starter button is pressed. To inject fuel after the engine fires you can keep the starter button pressed as long until the engine runs smooth. The starter motor will disengage by itself as soon as the engine starts.

With position "off" no fuel will be injected.

b) If you suspect that the engine is flooded, e.g. CHT just below 38°C (100°F) and primer control light on, you should switch off the primer and try to start the engine with full throttle. If the engine starts, wait until 3000 RPM are reached, then reduce throttle to keep approx. 3000 RPM.

c) If with normal CHT (+5° (41°F) up to +38°C (100°F)) the engine does not fire this may be a hint that the fuel filter is dirty and so the amount of fuel injected is reduced. The filter has to be cleaned or replaced before take off.
Take off with dirty fuel filter may result in RPM loss during take off!

4.5.1.3 **Taxiing**

Taxiing without assistance can be done with the steerable nose wheel (Option) and one wingtip on the ground. Flapsetting +10°. Operate the airbrake handle (connected to wheel brake) with the left hand and the throttle with the right hand. Place trim fully nosedown to get pressure on the nose wheel.
You can reduce the radius of turn by operating the wheel brake and applying more throttle so the rudder will help to turn the aircraft.

Caution: For taxiing always use engine speed so that the engine runs smoothly. This prevents vibration damage at the engine mount. On concrete it may be necessary to apply a little wheel brake to reduce taxi speed.

4.5.2 Self launching, take off and climb

4.5.2.1 Take off distance

Prior to take off check according to sect. 5.2.3 if the available runway length is sufficient.

It must be regarded, that a rising runway, wet or uneven surface, long grass etc. will increase the take off distance considerably.

Selflaunching should only be executed if in case of powerloss or engine failure there are possibilities to clear obstacles or for a safe outlanding. In case of doubt choose a safe tow launch.

4.5.2.2 Start roll and take off

Wing flaps + 10°, trim fully tail down. The take off roll may be executed with one wing on the ground. With a crosswind the into wind wing should be on the ground if there is no wing runner. Apply full throttle, as soon as the aircraft rolls lift the wing by applying aileron. Use full back stick during start roll until the nose wheel lifts off from the ground. Then roll on the mainwheel until you reach take off speed.

4.5.2.3 Climb

After take off accelerate the DG-500M to Vy = 90 km/h (49 kts) and climb with this speed. Retract the landing gear after reaching safety altitude. Execute the whole climb with full throttle to ensure a smooth engine run.

4.5.3 Launch

Due to the towhook position being in the middle of the fuselage and the excellent effectiveness of the ailerons and rudder, the possibility of wing dropping or ground loops, even on a slow starting aerotow is reduced. Take-off with strong crosswind is possible.

Aerotow

a) Aerotow is permitted only using the nose tow release. Set trim to neutral for aerotow.

b) Set the wing flaps to + 10°.
Pull the stick until the nose wheel lifts off from the ground. Then control the airplane so, that nose wheel and tail wheel don't touch the ground. Don't try to lift off before you reach an airspeed of 80 km/h (43 kts) (without ballast). On a rough airfield hold the control stick tight. The undercarriage can be retracted at safety height during the tow.

Normal towing speed is 120-130 km/h (65 - 70 kts).

For a cross country tow the speed can be as high as 197 km/h (106 kts), the flaps should be set to a negative setting (see sect. 5.3.4).

Warning: Aerotow with high take off weight requires a powerful tow plane. Many tow planes are not certified to tow gliders with high take off weights. Reduce the take off weight if necessary!

Winch launch (only allowed at the C.G. release)

Set the wing flaps to +10°.
Set the trim fully nose down for winch launch. To accomplish this, operate trimmer lever on the control column and push the control knob on the left cockpit wall to its forwardmost position.

Caution: During ground roll and initial take-off (especially when flying solo) push the control stick to its forwardmost position or fully nosedown to prevent excessive nose up pitching rotation during initial take-off.

After reaching safety altitude gradually pull back some on the stick, so that the glider will not pick up excessive speed. Don't pull too hard.

After reaching release altitude pull the tow release knob.

Recommended winch launch airspeed 110-120 km/h (60-65 kts).

Caution: Do not fly at less than 90 km/h (49kts) or not more than 140 km/h (76 kts).

Warning: Winch launch with high take off weight requires a powerful winch!

4.5.4 Free flight

Stalling characteristics (level and turning flight)
When stalled the DG-500M will continue to fly level with high sink rate and buffeting. If the stick is pulled further the DG-500M will drop the nose or drop one wing. During the stall a large angle of attack will be reached.
At forward C.G. positions the DG-500M can be flown in stall without wing or nose dropping. When reaching the minimum speed, the angle of attack has to be increased significantly, before the DG-500M stalls, so that the stalled flight is easy to recognize.
With stick forward and opposite rudder if required the DG-500M can be recovered without much loss of height. Rain does not influence this behaviour noticeably. The loss of height is ca. 30 m (100 ft).
Stall airspeeds see sect. 5.2.2.

Wing flap settings
Optimal settings depending on the wing loading see sect. 5.3.4.

High speed flying
Flap settings 0°, -5°, -10°. Do not exceed the max. airspeeds.
(see sect. 2.2 !)

Thermaling
Flap setting: +5°.
+10° only for narrow thermals.

4.5.5 Cruise engine on and ultilisation of the wing fuel tanks

General
The engine of the DG-500 M is not designed for continuous cruise with the engine.

Due to the high drag of the extended powerplant and as the propeller is designed for optimum take off performance cruise with higher speed is not efficient.

The optimum cruise is with the so called sawtooth technique.

After climb with Vy retract the engine and glide with airspeed according to the Mc Cready theory, flying slowly in lift and faster in sinking air.

The medium cruise speed achieved by sawtooth technique is not much less than for level engine on cruise, but the range will be more than doubled.

Performance data see sect. 5.3.5.3 and 5.3.5.5.

Utilisation of the wing fuel tanks (Options)
The wing fuel tanks have no fuel level indication. Therfore it is best to empty the fuselage tank to approx.10 l (2.6 U.S.gal.) and then to transfer the fuel from one wingtank into the fuselage tank. Should the fuselage tank become completely empty and the engine RPM's begin to drop, set the throttle immediately to idle and open one wing tank valve. After about 45 sec. there should be enough fuel in the main tank to apply full throttle again.
Another aid in determining fuel levels is the engine elapsed time indicator as with normal flight fuel consumption of 25-29 l/h (6.6-7.7 U.S. gal.) and knowing how much fuel was in the aircraft at take off, the amount of fuel left can easily be calculated. The engine hour reading should therefore be noted before take off or the daily elapsed time indicator in the DEI (see page 7.12) should be set to zero at take off.

4.5.6 Engine stop retraction and extension – start in flight and after landing

4.5.6.1 Stopping and retracting the engine in flight

1. Lift the rear view mirror so, that you see the propeller (only in front cockpit, fixed in rear cockpit). Check if the red handle of the manual extension - retraction switch on the right side console of the front cockpit is switched to the down position.
2. Bring the throttle back to idle.
3. Switch off the ignition. When the aircraft is controlled from the front cockpit switch off the ignition in the front DEI (rear ignition switch remains in "on" position). If controlled from the rear cockpit switch off the ignition in the rear cockpit (front ignition switch remains in "on" position).
4. Fly at 80-90 km/h (43-49 kts).
5. Slow down the engine slowly with the propeller brake.
6. If the propeller does not stop in the retraction position, release the prop-brake again and accelerate the DG-500 M to approx.90 km/h (49 kts) until the propeller starts turning slowly. Stop the propeller with the prop-brake as soon as the control light stops shining (red). In case the prop-brake works only weakly the airspeed should be reduced before the propeller reaches the retraction position.
7. Keep the propeller brake on during the entire engine retraction (control light must be out). The engine will retract by itself as soon as the controllight stops shining. In case the automatic retraction is defective, the engine must be retracted via the manual extension-retraction switch.
8. After engine retraction set the switch in the DEI to "Avionik". With only short gliding flights i.e. saw tooth cross country flights, the switch can be left on "Avionik + engine".

Note: With the options "automatic propellerbrake and automatic turning the propeller to the retraction position" see page 7.7 it is not neccessary to operate the propellerbrake by the pilot.

If option level II is installed, it is possible to turn the propeller into the retraction position by pressing the starter button, if the propeller was not stopped already in the retraction position (only possible in the air).
It is strongly recommended to switch off this optional automatic from time to time, to train the normal engine retraction procedure!
Note: With the factory approved radio installation set (Option) the radio will be switched automatically from normal flight to powered flight mode when retracting and extending the engine, see section 7.16.2.

4.5.6.2 **Extension and starting the engine in flight**

1. With the engine extended but not running the rate of sink at 90 km/h (49 kts) increases to 1.5 m/sec. (300 ft/min.). This is a glide angle of 17! Therefore restarting the engine should only be done over landable terrain and not below 500 m (1650 ft) above ground. But it is better to restart the engine at 200 m (660 ft) over a landable field rather than at 500 m (1650 ft) over a forest or unlandable scrub. Should a flight be conducted over a wide expanse of unlandable terrain, the engine should then be restarted at 1000 m (3300 ft) above ground level so that if the engine does not start, all the emergency starting procedures can be followed in peace including retraction of the engine if necessary.
2. In a normal restarting situation the loss of altitude from starting the extension procedure until the engine is running is only about 20 m (70 ft).
3. Extension: Fly at 90 km/h (49 kts) with flaps set at 10°. Main-switch on. Switch on DEI to "Avionik + engine". Check if the red handle of the manual extension-retraction switch on the right side console of the front cockpit is switched to the down position.
   Check if the primer switch is in the "automatic" position. Switch on ignition and press the starter button. The engine will extend by itself and the starter motor will start the engine as soon as the powerplant is extended. When the engine fires apply more throttle. In case of starting problems see sect.4.5.1.2.

Note: To activate the automatic extension it is necessary to switch the switch in the DEI to "Avionik + engine" **prior** to switching on the ignition.
Otherwise the automatic system will not be activated (safety interconnection).
Both ignition switches must be in the "on" position, this will be displayed by the green control light in the DEI.

4.5.6.3 **Extension and starting the engine after landing**

The same procedure see 4.6.2 may be used after landing for taxying. Operate the ignition switch after touch down. On very uneven runways extend the engine after stopping the aircraft to reduce wear of the extension-retraction unit.

4.5.7 **Approach and landing**

4.5.7.1 **With the engine retracted**

It is recommended to dump the waterballast before landing even on airfields. Dump the ballast before an outlanding in any case. Abeam the landing point extend the landing gear and set the wing flap to landing setting (+10° for normal landing, L for short landing).
In calm weather approach with approx.105 km/h (57 kts) (ballast dumped!). With strong wind fly faster! The very effective Schempp-Hirth dive brakes make a short landing possible. So a slip is not necessary as a landing technique.

Caution: In a sideslip with full rudder deflection there is a rudder control force reversal and the angle of yaw becomes very large.
It is recommended to limit the rudder deflection to about 75% of the full movement. When recovering from the sideslip by neutralizing the ailerons the rudder returns by itself to neutral too.
Pilots should investigate the full sideslip at height before using sideslipping on an approach.

Strong crosswind offers no problem. Do not approach too slowly with fully extended airbrakes otherwise the aircraft may drop during flare out. When flaring out keep the airbrake setting you were using, opening them further may drop the sailplane.
You can land the DG-500M on soft fields with the landing gear extended, as there is no tendancy of nosing over. During ground roll the wing flaps may be kept in the landing position.

Clean the landing gear and tow release after landing in an muddy field. Dirt in the front strut can keep the landing gear from locking over center next time. Simply hosing with water is the best cleaning method.

Landing with the landing gear retracted
It is recommended to use this technique only on very short fields or if there are furrows in a cross direction in the field. After wheel up landing check the fuselage belly, the C.G. tow hook and the tow hook bulkheads for damage.

Note: Extension of the engine after the landing see sect. 4.5.6.3

4.5.7.2 **Landing with the engine extended and running**
Wing flap setting L

Follow the instructions in sect. 4.5.7.1 except that no side slipping should be done. If longer sinking flights with the engine idling are necessary it is recommended to apply some throttle at least every 60 seconds to ensure enough engine lubrication.

4.5.7.3 **Landing with the engine extended and stopped**
Wing flap setting L

Due to the high drag from the extended engine, the approach should be made using as little airbrake as possible.
Fully extended airbrakes may result in a heavy and uncomfortable landing.
If possible avoid landing with the engine extended and stopped.

4.5.8 Flight with water ballast

Wing tanks
recommended ballast for smooth thermals:

	rate of climb		ballast	
	m/s	fpm	ltr.	U.S. gallons
below	1,5	300	none	
	1,5-3	300-600	60	16
more than	3	600	max. ballast	

Do not exceed the maximum gross weight when loading the water ballast. The maximum quantity of water allowed is dependent on the empty weight and the cockpit load (see sect.6). In flight, the water drains at approx.0,5 ltr./sec. (1.1 lbs/sec).
If there is the risk of freezing, dump all water before you reach freezing altitude or descend to lower altitudes. If you suspect a tank is leaking, dump all water immediately. Water ballast raises the approach speed, so it is recommended to dump the waterballast before landing. Dump the ballast before an outlanding in any case.
Filling the waterballast see sect. 4.2
After filling level the wings and check if the dump valves are tight. It is not allowed to fly with leaking watertanks as this may result in an asymmetric loading condition.
Dumping of the waterballast
Open both wing ballast tanks together. Do not empty one wing tank after the other to avoid an asymmetric loading condition.
Valves leaking, servicing
Please refer to the maintenance manual sect. 1.8 and 4.1.

4.5.9 Flight at high altitude and at low temperatures

With temperatures below 0°C (32°F) for instance when wave flying or flying in winter, it is possible that the control circiuts could become stiffer. Special care should be taken to ensure that there is no moisture on any section of the control circuits to minimize the possibility of freeze up. It could be advantageous to apply vaseline along all the edges of the airbrake cover plates to minimize the possibility of freezing closed.

Apply the controls in short periods.
It is not allowed to carry waterballast.

Caution:
1. At temperatures below -20°C (-4°F) there is the risk of cracking the gelcoat.
2. Attention must be paid to the fact that at higher altitudes the true airspeed is grater than the indicated airspeed.
   The max. speed VNE is reduced. See the following table:

Altitude in Metres	0-2000	3000	4000	5000	6000
VNE IAS km/h	270	256	243	230	218

Altitude in ft.	0-6600	10000	13000	16000	20000
VNE IAS kts.	146	138	131	124	117

3. Dump the water ballast before you reach freezing altitude or descend to lower altitudes.
4. Do not fly below 0°C (32°F) when your glider is wet (e.g. after rain).

4.5.10 Flight in rain and thunderstorms

With light rain the stall speed and the sink rate increases slightly and the approach speed has to be increased.
Warning: Flights and especially winch launches in the vicinity of thunder storms should be avoided. Due to lightning discharge, carbon fibre structures may be destroyed.

With the engine running
In normal rain, the rate of climb will be reduced by 1/3. The cross country cruising speed will also be reduced by approx. 10 km/h (5 kts). Take off in rain should only be done with a long enough airfield and attention given to safety. A take off should not be attempted in heavy rain. Rain increases the wear on the leading edge of the propeller so that any flight in rain should be kept to the absolute minimum.

4.5.11 Cloud flying

(only without waterballast and with the engine retracted)
Take care to fly smoothly and coordinated. It is prohibited to use a spin as a method for loosing altitude in the clouds. In case of emergency, pull out the dive brakes fully before exceeding a speed of 200 km/h and dive with max. 200 km/h (108 kts) to leave the cloud.

Warning: Flying in or near thunderstorm-clouds is prohibited.

4.5.12 **Aerobatics**

Permissible only without ballast in the wings and with the engine retracted

Execute only the approved manoeuvres.
Wing flap setting for all manoeuvres 0°.

Approved manoeuvres

1. Spins
2. Inside Loop Entry Speed 200 km/h (108 kts)
3. Chandelle Entry Speed 200 km/h (108 kts)
4. Lazy Eight Entry Speed 200 km/h (108 kts)

Spins:

Caution: Prolonged spinning is only possible at aft C.G. positions, this means single seated. It is not necessary to extend the dive brakes during spin recovery. The DG-500M shows a very large nose down pitch after leaving the spin. So you have to flare out correspondingly.
With **medium and forward C.G. positions** prolonged spinning is not possible. The DG-500 M will terminate the spin by itself after a certain number of turns dependent on the C.G. position. The nose down pitch and speed will be high so with these C.G. positions not more than 1 turn spins should be executed, to avoid high g-loads.

In addition there is a tendency that the spin will turn into a spiral dive after 1 or 2 turns. Reaching this state you have to recover immediately.

Inducing the spin: (Normal procedure)
Gradually bring the sailplane into a stall. When it starts to burble, pull the stick back completely and kick in full rudder in the spin direction.

Recovering from the spin:
Apply full rudder opposite against direction of the spin, pause, then ease stick forward until the rotation ceases, centralize the controls and carefully pull out of the dive. The ailerons should be kept neutral during recovery. Height loss during recovery is approx. 100 m (320 ft), the max. speed is 200 km/h (108 kts).

5. Performance

5.1 Introduction

5.2 **Approved Data**

5.2.1 Airspeed indicator system calibration

5.2.2 Stall speeds

5.2.3 Take off performance

5.3. **Additional Information**

5.3.1 Demonstrated crosswind performance

5.3.2 Gliding performance

5.3.3 Flight Polar

5.3.4 Operating the wingflaps

5.3.5 Performance under power

5.3.6 Noise data

5.1 Introduction

Section 5 provides approved data for airspeed calibration, stall speeds and take-off performance and non-approved additional information.

The data in the charts has been computed from actual flight tests with the sailplane in good and clean condition and using average piloting techniques.

5.2 Approved data

5.2.1 Airspeed indicator system calibration

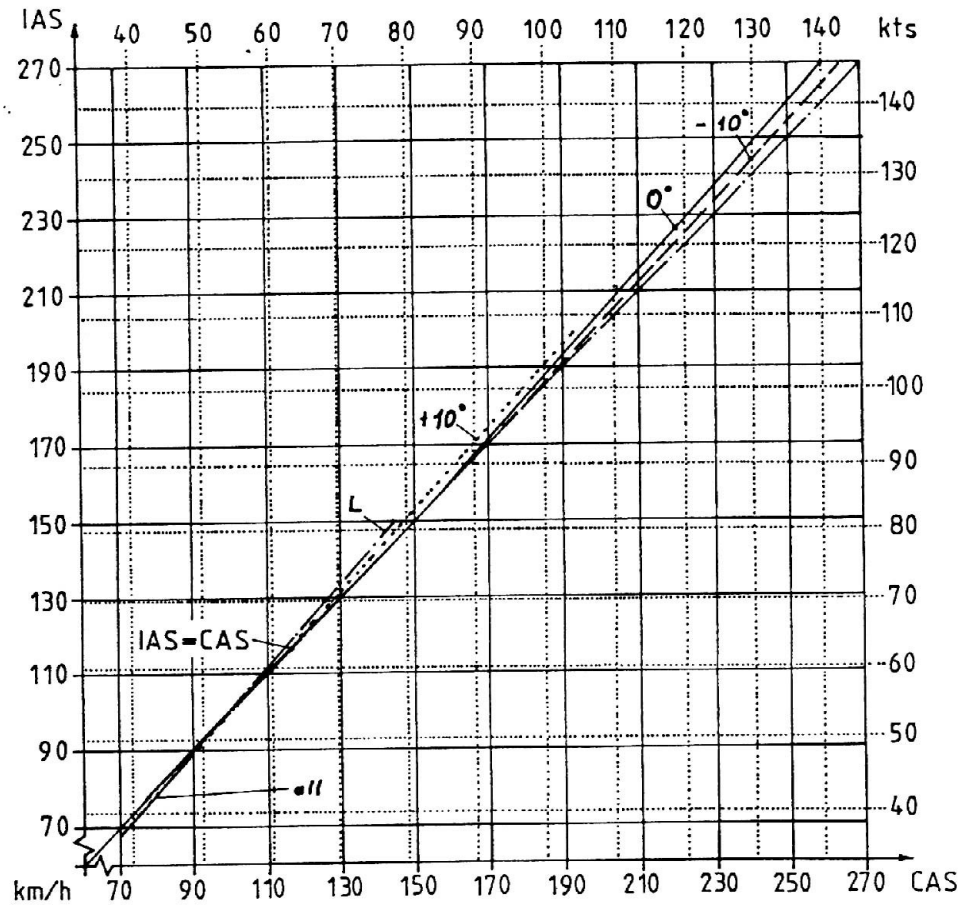

IAS = indicated airspeed
CAS = calibrated airspeed

Caution: The airspeed indicator is to be connected to the static ports and pitot probe in the fuselage nose.

5.2.2 **Stall speeds**

Min. airspeed in level flight.

Airbrakes retracted

Flap setting	wing loading			
	35	40	45	kg/m²
	7.2	8.2	9.2	lbs/ft²
L = +15°	64	68	72	km/h
	34.6	36.7	38.9	kts
+ 10°	66	71	75	km/h
	35.6	38.3	40.5	kts
0°	70	75	80	km/h
	37.8	40.5	43.2	kts
- 15°	75	80	85	km/h
	40.5	43.2	45.9	kts

Airbrakes extended

Flap setting	wing loading			
	35	40	45	kg/m²
	7.2	8.2	9.2	lbs/ft²
L	70	75	80	km/h
	37.8	40.5	43.2	kts
+ 10°	73	78	83	km/h
	39.4	42.1	44.8	kts
0°	76	81	86	km/h
	41.6	43.7	46.4	kts
- 15°	80	86	91	km/h
	43.2	46.4	49.1	kts

Flight mass		wing loading	
kg	lbs	kg/m²	lbs/ft²
600	1323	32.8	6.72
650	1433	35.5	7.27
700	1543	38.3	7.85
750	1653	41	8.40
800	1764	43.7	8.95
825	1819	45.1	9.24

The loss of height for stall recovery is approximately 30 m (100 ft) if recovered immediately.

5.2.3 Take off performance

The data is valid for take off from dry level concrete surface, no wind and proper condition of engine, propeller and aircraft. The take off procedure is to be executed according to 4.5.2.

SR = take off roll
S = take off distance to 15 m (50 ft.) altitude
H = altitude of airfield above MSL, QNH = 1013 mb
T = temperature on ground

H	T	W = 825 kg		W = 750 kg		W = 660 kg	
m	°C	SR(m)	S(m)	SR(m)	S(m)	SR(m)	S(m)
0	0°	261	404	229	359	132	244
	15°	290	450	255	399	147	272
	30°	321	498	282	442	163	301
500	0°	293	454	258	403	149	274
	15°	327	505	287	448	166	305
	30°	361	559	318	496	184	337
1000	0°	331	512	291	454	168	309
	15°	368	569	324	505	187	344
	30°	408	630	359	559	207	380
1500	0°	374	579	329	514	190	350
	15°	416	644	366	572	211	389
	30°	461	713	405	633	234	431

H	T	W=1820 lbs		W=1650 lbs		W=1460 lbs	
ft	°F	SR(ft)	S(ft)	SR(ft)	S(ft)	SR(ft)	S(ft)
0	32°	856	1328	749	1173	437	807
	59°	953	1478	834	1305	486	898
	86°	1054	1636	923	1444	538	993
1640	32°	964	1491	844	1316	492	904
	59°	1073	1659	939	1464	548	1006
	86°	1188	1836	1039	1621	606	1114
3280	32°	1088	1681	952	1484	555	1019
	59°	1211	1870	1059	1651	618	1135
	86°	1340	2070	1172	1828	684	1256
4920	32°	1229	1902	1075	1679	627	1154
	59°	1368	2116	1197	1868	698	1284
	86°	1514	2342	1324	2068	773	1421

Dry level grass surface increases the take off distance by 10% to 15%.
Warning: Wet soft grass surface may increase the take off distance much more!

5.3 Additional Information

5.3.1 Demonstrated crosswind performance

The demonstrated crosswind velocity is 15 km/h (8 kts) according to the airworthiness requirements.

5.3.2 Gliding performance

Performance data

Wing loading		kg/m² (lbs/ft²)	35 (7.2)	40 (8.2)	45 (9.2)
min.sink rate		m/s (ft/min)	.57 (112)	.61 (120)	.64 (126)
at	V	km/h (kts)	80 (43)	86 (46)	90 (49)
best glide ratio		/	45	46	47
at	V	km/h (kts)	100 (54)	107 (58)	113 (61)

A variation in speed by + 10 km/h (5 kts) from the above will decrease the best glide angle by 0.5 glide points and increase the min. sink rate by 1 cm/sec. (2 ft/min).

The polar curves can be seen on the next page.

For optimum performance, the aircraft should be flown with a C.G. towards the rear of the allowable range. This especially improves thermaling performance. However the aircraft will be more pitch sensitive.

The wing fuselage joint, wing parting and the tailplane fin joint should be taped up and the aircraft thoroughly cleaned to obtain maximum performance.

The polars apply to a "clean" aircraft.

With dirty wings or flight in rain, the performance drops accordingly.

Operating the wing flaps see 5.3.4.

5.3.3 Flight polar

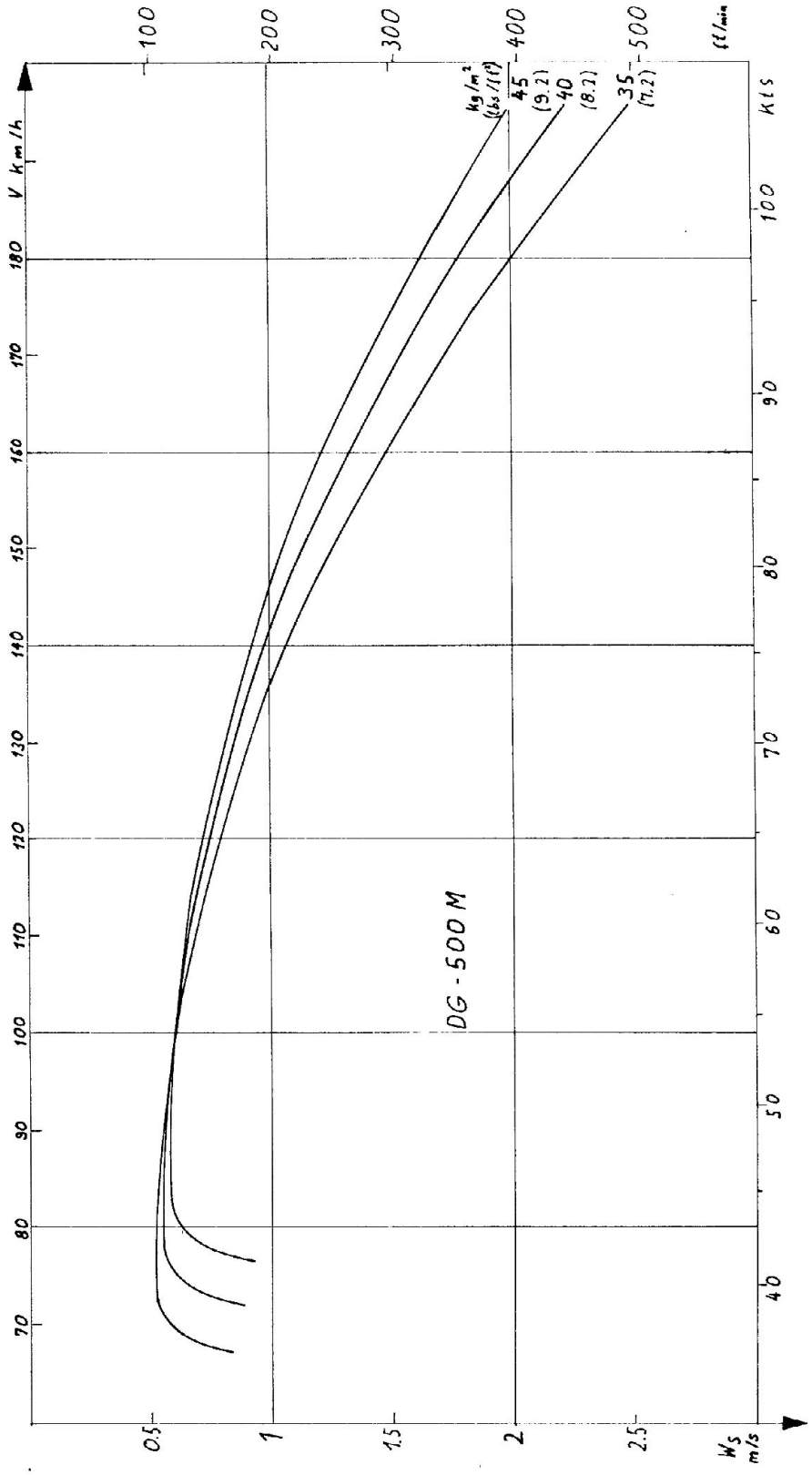

5.3.4 **Operating the wing flaps**

The following flap settings should be used for optimum performance for the speed ranges and wing loadings specified:

Speeds in km/h

W/S (kg/m²)		35	40	45
flap	+ 10°	up to 75	up to 80	up to 85
	+ 5°	75-95	80-100	85-105
	0°	95-130	100-140	105-145
	- 5°	130-160	140-170	145-180
	- 10°	160-VNE	170-VNE	180-VNE

Speeds in kts

W/S(lbs/ft²)		7.2	8.2	9.2
flap	+ 10°	up to 41	up to 43	up to 46
	+ 5°	41 – 51	43 – 54	46 - 57
	0°	51 – 70	54 – 76	57 - 78
	- 5°	70 – 86	76 – 92	78 - 97
	- 10°	86 – VNE	92 – VNE	97 - VNE

To accelerate or flatten out, always use flaps and elevator simultaneously. Set the flap earlier in its position for the speeds listed above because flattening out raises the wing loading and speeding up lowers it. Set the flaps earlier, the higher the g-loads. Flatten out with 1.5 g or speeding up with 0.5 g changes the optimal speed approximately 15 km/h (8 kts) at low speeds and 30 km/h (16 kts) at high speeds.

5.3.5 Performance under power

5.3.5.1 **Rate of climb**

Measured rates of climb for 15°C (59°F) at MSL. 15°C increase in temperature reduces the rate of climb by ca. 0.12 m/s (24 ft/min.).

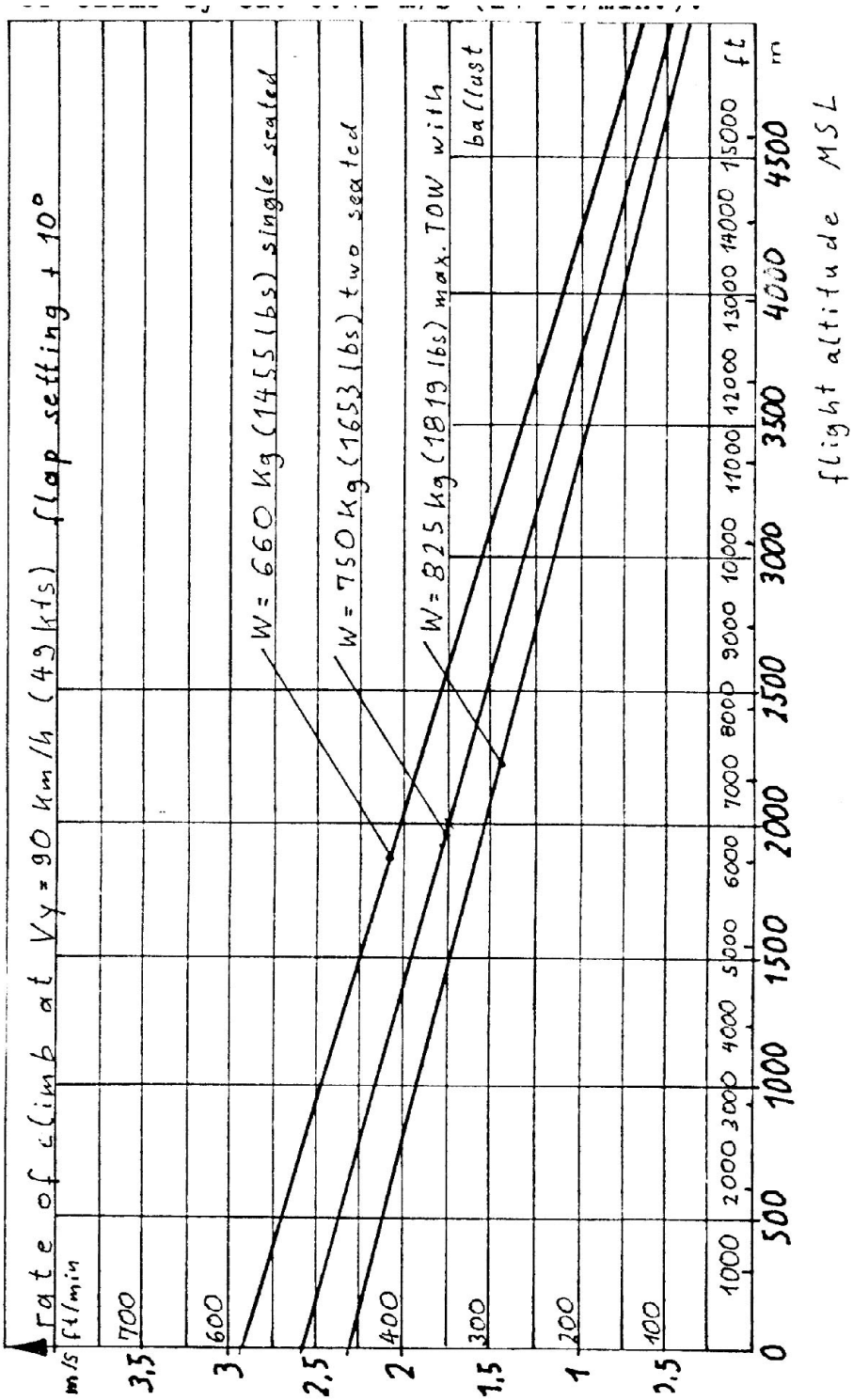

5.3.5.3 **Cruising Flight**

The cruising speed is 140-150 km/h (76-81 kts) with maximum continuous power 6900 RPM.

5.3.5.4 **Maximum operational altitude**

The maximum operational altitude is more than 5000 m (16000 ft) MSL.

For continuous operation at higher altitudes, the main nozzle in the carburettor may be set to a smaller fuel flow in accordance with the engine manufacturer.

5.3.5.5 **Maximum Range** (without reserve)
Take off mass 750 kg, 1653 lbs

1. At cruising speed with full fuselage tank (38 l, 10 US gal)= 240 km, 130 nm.
   This is 6,4 km/l; 13 nm/US gal.

2. With sawtooth flight technique Mc Cready O with full fuselage tank (38 l, 10 US gal)= max. 600 km; 324 nm.
   This is 16 km/l, 32 nm/US gal

   These values can only be achieved with still air and exact speed control.

3. With sawtooth flight technique Mc Cready 1 with full fuselage tank (38 l, 10 US gal)= max. 550 km; 297 nm.
   This is 14,5 km/l, 30 nm/US gal.

   The values for sawtooth technique are for beginning the climb at 600 m (1970 ft) MSL and a climb of 1000 m (3280 ft).

5.3.5.6 **Maximum level flight speed**

The maximum level flight speed is 155 km/h (84 kts) with 7200 RPM.
Note: With full trottle the maximum allowable engine RPM of 7200 will be exceeded.

5.3.6 **Noise data**
Noise requirements: Chapter VI LSL (BAZ announcement issued Jan. 1st, 1989) Measured noise level: 61.5 dB(A) Maximum permissible noise level: 71 dB(A)

6. Mass (weight) and balance

6.1 Introduction

This section contains the payload range within the sailplane may be safely operated.
A procedure for calculating the inflight C.G. is also provided.

A comprehensive list of all equipment available for this sailplane is contained in the maintenance manual.

6.2 Weighing procedures

See maintenance manual DG-500M.
Datum: Wing leading edge at the rootrib.
Reference line: aft fuselage centre line horizontal. The weighing is to be executed with the engine retracted and all tanks emptied.

6.3 Weighing record

The result of each C.G. weighing is to be entered on page 6.5. If the min. cockpit load has changed this data is to be entered in the cockpit placard as well. When altering the equipment, the new data can be gathered by a C.G. calculation.(see sect.6.9).
The actual equipment list is enclosed in the maintenance manual.

6.4 Basic empty mass and C.G.

Actual data see page 6.5.
With the empty weight C.G. and the cockpit loads in the limits of the diagram on page 6.6, the inflight C.G. limits will not be exceeded.

6.5 Mass of all non-lifting parts (WNLP)

The max. mass of all non-lifting parts is **560 kg (1235 lbs).**

WNLP is to be determined as follows:
WNLP = WNLP empty + cockpit load (pilot, parachute, fuel baggage, barograph, cameras etc.).
WNLP empty = Total empty weight minus weight of the wings.

6.6 **Max. mass (weight)**

Max. weight without waterballast = WNLP + W wings

Max. weight with waterballast = 825 kg (1819 lbs)

6.7 **Useful loads**

Max. load **without** waterballast = max. weight without waterballast - empty weight

Max. load **with** waterballast = max. weight with waterballast - empty weight

The data is recorded on page 6.5.

6.8 **Loading chart**

Cockpit load see table on page 6.5.
a) single seated

max. load in the front seat	110 kg	242 lbs
min. load in the front seat	see placard in cockpit and weighing report page 6.5	

b) two seated
max. cockpit load is 210 kg (463 lbs) with a max. of 105 kg (231 lbs) in the front seat or 110 kg (242 lbs) in the front seat and 90 kg (198 lbs) in the rear seat.
min. cockpit load in the front seat is the min. cocpit load see a) minus 40% of the load in the rear seat.
With these loads, the C.G. range given under 2.8 will be kept in the limits if the empty weight C.G. is in its limits.
With lower pilot weight necessary ballast must be added in the seat. Ballast put on the seat (lead ballast cushion) must be fastened at the connections of the safety belts.

Removable Ballast (Option) see sect. 7.16.1.

Baggage: max. 15 kg (33 lbs)
Heavy pieces of baggage must be secured to the baggage compartment floor (screwing to the floor or with belts). The max. mass secured on one half of the floor (left and right of fuselage centre line) should not exceed
7,5 kg (16.5 lbs).

Waterballast in the wing tanks:
The tanks have a capacity of 50 l (13.2 U.S. gal) per wing.

The allowed amount of waterballast
is dependent on the empty weight and of the load in the fuselage and **can be determined from the diagram on page 6.7 "ballast chart".**
It is only allowed to fly with symmetric wing ballast!

Fuel in the wing tanks:
The allowed amount is dependent on the empty mass, the load in the fuselage and the waterballast in the wings and can be determined from the diagram on page 6.7 "ballast chart". It is only allowed to take off with symmetric fuel load.

Weighing report (for 6.3)
Distances in mm, masses in kg

25.4 mm = 1 inch 1 kg = 2.2046 lbs.

Date of weighing:						
executed by:						
Date of equipment list:						
Empty mass						
Empty mass C.G.						
max. mass without W.B.						
max. load without W.B.						
min. cockpit load in front seat						
max. load in both seats						
Inspector signature, stamp						

Weighing was executed with tailwheel with: plastic hub
brass hub (see 7.16.5)

for 6.4 **Empty weight C.G. limits**

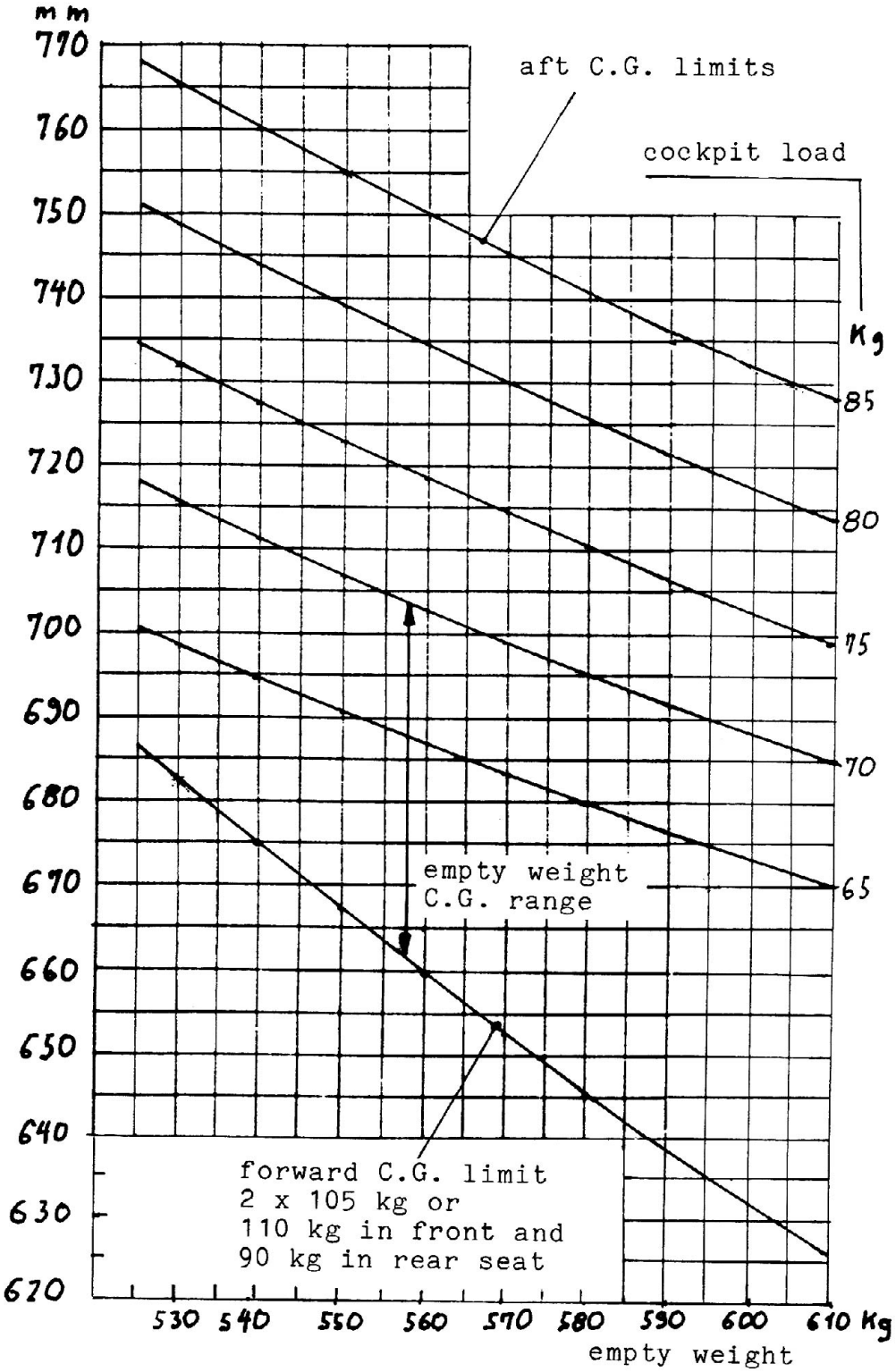

25.4 mm = 1 in., 1 kg = 2.2046 lbs

DG-500M ballast chart (for 6.8)
to determine the max. allowable waterballast and fuel in the wing tanks.

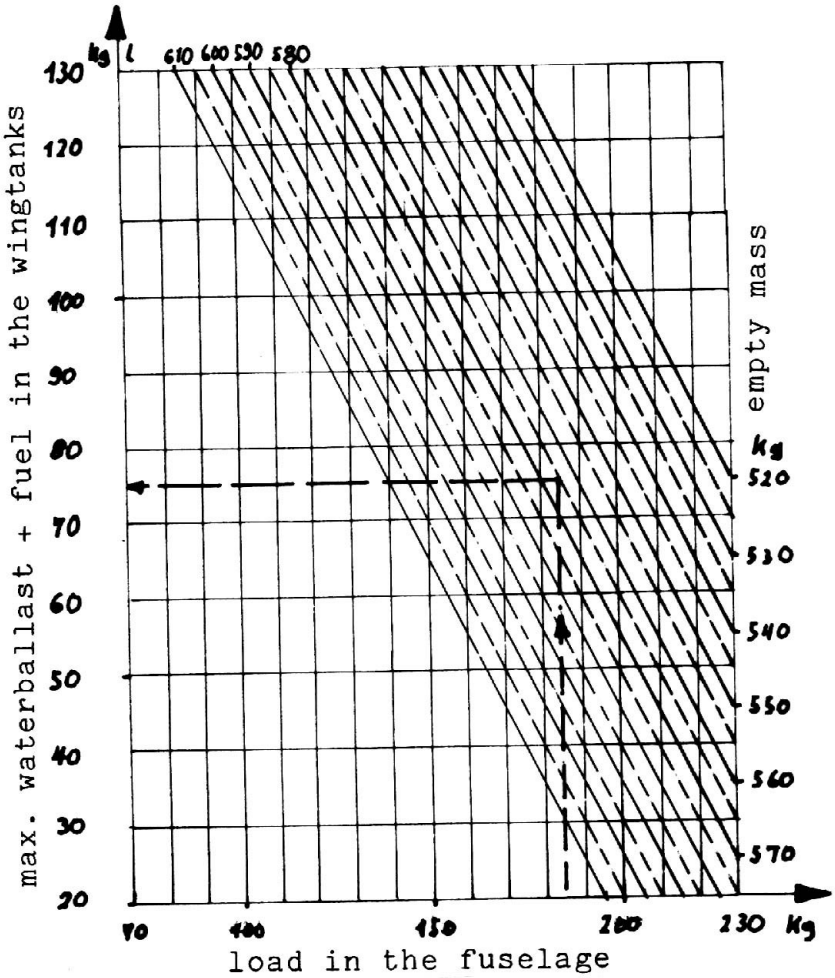

1 kg = 2.2046 lbs

3.785 kg (l) = 1 US gal.

6.9 C.G. calculation

The actual C.G. can be determined as follows:

For each item, the moment mass x C.G. has to be determined and to be added up and divided by the total mass. See the following example:

1 kg = 2.2046 lbs = .264 US gal.water 0.305 m = 1 ft

Item	mass kg	C.G. behind datum m	moment m kg
aircraft empty	530	0,70	371,0
Pilot front	75	- 1,35	- 101,25
rear	85	- 0,27	- 22,95
Waterballast in the wings	40	0,243	9,72
fuel in fuse-lage tank	20	0,409	8,18
Sum	**750**	XS=0,353 CG=moment/mass	**264,7**

The limits of the inflight C.G. 0.255 m - 0.48 m should not be exceeded!

The most important C.G. positions (behind datum):

Pilot:
The C.G. position is dependent on the pilots shape, mass and thickness of the parachute. The pilot C.G. position can be determined by executing a weight and balance measurement with glider empty and equipped with the pilot etc. see maintenance manual. Please note, that the distance a has to be measured with both configurations, as it may change due to deflection of the landing gear.
The pilot C.G. can be determined by the following equation:

$$XP = (XSF \quad MF - XSE \quad ME)/MP$$

MF = flight mass XSF = flight C.G. MP = pilot mass
ME = empty mass XSE = empty C.G.

If the actual pilot C.G. is not known, you have to take the values from the following table:

flight: f = near the forward C.G.
r = near the aft C.G.

Pilot mass (kg)	pilot C.G. (m) front cockpit f	front cockpit r	rear cockpit f	rear cockpit r
110	-1,348	-1,295	-0,277	-0,232
105	-1,350	-1,296	-0,278	-0,233
100	-1,351	-1,297	-0,279	-0,234
95	-1,352	-1,298	-0,280	-0,235
90	-1,353	-1,300	-0,281	-0,236
85	-1,355	-1,301	-0,283	-0,237
80	-1,356	-1,302	-0,284	-0,238
75	-1,357	-1,303	-0,285	-0,239
70	-1,359	-1,304	-0,286	-0,240
65	-1,360	-1,305	-0,288	-0,241
60	-1,361	-1,306	-0,289	-0,242
55	-1,362	-1,307	-0,290	-0,243

Further C.G. positions:

Baggage or battery in baggage compartment:	0.31 m
Fuel in fuselage tank:	0.409 m
Waterballast in the wings:	0.243 m
Instruments in front panel:	- 1.870 m
Instruments in rear panel:	- 0.700 m
Removable ballast (Option see 7.16.1a):	- 2.455 m
" " (" see 7.16.1b):	- 1.920 m
Tail wheel	5.345 m

C.G. Shift due to extension of the engine

XS 2 = XS 1 - 14.5/W

W = total mass (kg)
XS 2 = C.G. position with engine extended (m)
XS 1 = C.G. position with engine retracted (m)

Section 7

7.1 Introduction

This section provides description and operating of the sailplane and its systems.

Refer to section 9 "Supplements" for details of optional systems and equipment.

M.M. = Maintenance manual

7.2 Airframe

The DG-500M is a twoseater high performance sailplane with retractable powerplant and wing flaps.

Construction

Wings, ailerons and wingflaps	CFRP-foam-sandwich-shell CFRP-Rovingspar caps
Elevator	GFRP-foam sandwich-shell
Horizontal tailplane and rudder	GFRP-foam-sandwich-shell
Fuselage	GFRP-shell, fuselage boom with Tubus core

Canopy

Two canopies hinged at the right fuselage side. Canopy glass made from clear Plexiglas or Plexiglas GS green 2422 as option.

Tailplane

T-Tail with conventional stabilizer-elevator and spring trim.

Color	Airframe:	white
	registration numbers:	grey RAL 7001
	or	red RAL 3020
	or	blue RAL 5012
	or	green RAL 6001

7.3 **Cockpit, cockpit controls and placards**

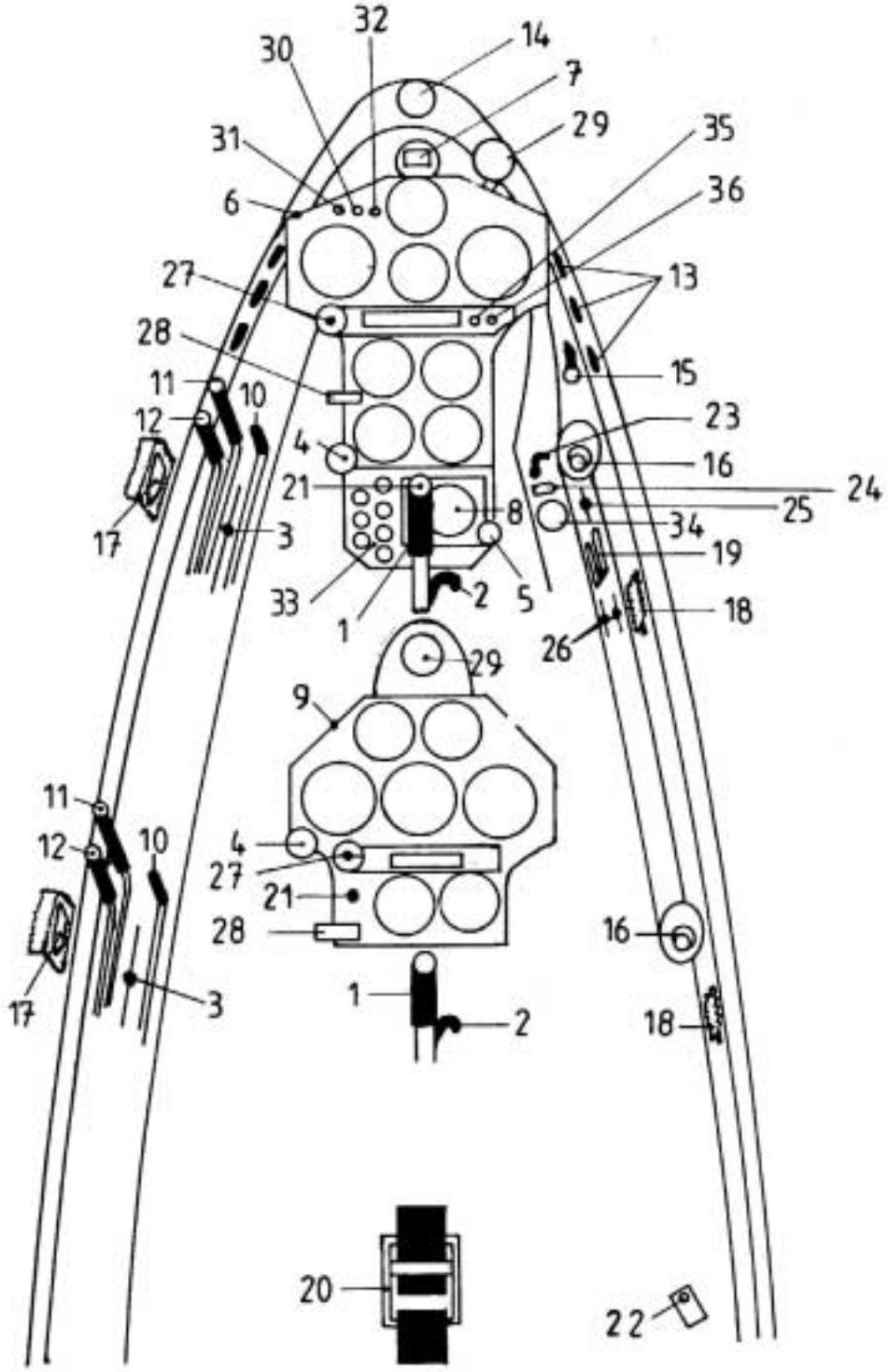

1) Control Column
   The rear control stick is removable. Therefore open the snap shakle at the trim release lever and disengage the trim cable. Pull out the stick after opening the cap nut.

2) Release lever for the trim mechanism - green.
   Operation see sect. 7.4 elevator control.

3) Trim position indicator and trim preselection lever

4) Tow release knob - yellow.

5) Rudder pedal adjustment knob – black
   (only in front cockpit)

   By pulling on the knob, the locking pin will be disengaged and the rudder pedals can be pulled back towards the pilot or pushed forward away from the pilot.

6) Front instrument Panel
   After removing the side screws at the base 2 x M 6 and after removing the screws attaching the cover to the panel 6 x M 4, the cover can be removed towards the front. The panel remains in the aircraft.

7) Compass installation position.

8) Radio installation position.

9) Rear Instrument Panel
   After removing the side screws attaching the panel to the cover (4 x M 4) the panel can be hinged backwards into the cockpit (take out the control stick first!).

10) Undercarriage retraction - extension handle - black

forward - undercarriage down
back - undercarriage retracted

The undercarriage is locked in the extended position by an overcentre locking arrangement and an additional safety catch. The handle is to be turned towards the cockpit wall, so that the locking catch will engage.

11) Airbrake handle - blue
The wheel brake is operated at the end of the airbrake handle travel.

12) Wing flap handle - black

L2 L1 10 5 0 -5 -10 -15

13) Constantly open anti-fogging air vents

14) Main air vent

15) Main air vent operating knob
pushed in - closed
pulled out - open

16) Swivel air vents

17) Canopy opening handle - white-red
towards the nose - closed
into cockpit - open

18) Canopy emergency release handle - red
towards the nose - closed
into cockpit - open

For emergency release both handles 17 + 18 have to be operated.

19) Water ballast dump handles - silver (Option)

upper handle - right hand water bag
lower handle - left hand water bag
forward - valve closed
into the cockpit - valve open

20) Adjustment strap for the rear seat shell (to be operated on the ground)

21) Push to talk button (Option)

Senden
transmit

22) 12 V socket for charging the batteries and to operate external fuelpumps. Only live with main switch on.

23) Main switch - red
to the front = off, to the rear = on
With this main switch the complete electric power supply will be cut off mechanically. After taking out the main switch key the DG-500 M can't be operated.

main
off Haupt- on
schalter

24) Manual retraction - extension switch for the powerplant
By lifting the red cover plate you switch the system from automatic to manual operation and give access to the manual retraction extension switch.

to the front = extension
to the rear = retraction

Note: Extend the engine manually on the ground prior to take off or for maintenance work. Retract the engine manually on the ground. Manual retraction in the air only if the automatics don't work. Make sure, that the propeller is vertical (red control light off!)

25) Fuel cock - red

auf Brandhahn zu
open fuelcock closed

to the front = open
to the rear = closed

Close the fuel cock only in an emergency (see chapter 3)

26) Operating knobs for the wing fuel tanks (Option)
- black

to the front = open
to the rear = closed
upper knob = right tank
lower knob = left tank

auf Flügeltanks zu
open ingtanks closed

27) Throttle handle with integrated starter button
The starter button is only activated when the engine is extended and both ignition switches are in the "on" position. As soon as an engine speed of 1200 RPM is exceeded, the starter will be switched off.

Throttle

© Starter

28) Propellerbrake

Propellerbrake

29) Rear view mirror to watch the propeller during aligning procedure

30) Primer switch (only front cockpit)
up = automatic operation
centre = off (no injection)
down = on (injection as long as the starter button is pressed see also sect. 4.5.1.2 a)

Primer
auto
off
on

31) Control light for Primer (only front cockpit).
Shines as long as there is voltage at the primer valve to open it.

32) Switch for automatic propellerbrake
(Option) (only front cockpit)

up = automatic on
down = automatic off

Option level I: Automatic propellerbrake
After switching off the ignition the automatic will brake down the propeller speed. The braking procedure starts as soon as the engine speed is below 3000 RPM. The braking is continuous until the propeller is stopped. Then the brake opens again and the propeller must be positioned vertical by the airstreem. As soon as the propeller is in the correct position (controllight off) the brake

32) ff
engages and holds the propeller until the engine is retracted.
Note: Option level II (no on-off switch):
Electrical aligning of the propeller (only in conjunction with Option Level I).
If the propeller after stopping is not in the retraction position, it is possible to turn the propeller slowly with the starter motor into retraction position by pressing the starter button. The starter motor speed is reduced by electronic means during this procedure. This procedure is not possible on the ground due to the slow starter motor speed.

33)
a) circuit breaker 15 A for the engine extension - retraction motor
b) fuse 6 A for the DEI and for the electric brake, see item 32 option level I
c) fuse 4 A for the 12 V socket
d) fuse 2,5 A for the radio
e) fuse 2,5 A spare fuse for turn – and bank indicator or horizon
f) fuse 1 A for the electric variometer
g) fuse 10 A for the generator

All the above fuses b) - g) are G fuses 250 V with indicator 5 x 25 medium slow. The coloured indicator can be easily seen through the glass top of the fuseholder when the fuse is blown.

34) Engine elapsed time indicator
The engine elapsed time indicator is connected to the generator and operates only when the engine is running and when the generator fuse (33 g) is in.
Installation can also be in the instrument panel or in the relais compartment access cover when oxygen system instrumentation is installed in the side panel.

35) Change over switch from static pressure to total energy pressure for the variometer (Option), only in front cockpit.
up stat = Vario operating on static pressure
= for engine running flight
down T E = Vario operating on total energy probe
= soaring flight

36) Change over switch - soaring flight - engine on flight
up Avionik + = The total electrical system is engine on line
down Av = only soaring flight instrumentation, radio and 12 V socket No.22 on line.

Controls and indicators in the DEI
(digital engine indicator) only in front DEI

37) Ignition switch: on
ignition up=on, down=off
off

To operate the switch, the toggle has to be pulled out first (safety lock against inadvertent operation). The ignition is only on, if the ignition switches in both cockpits are in the "on" position.
This means, that for operation from the front seat the ignition switch in the rear cockpit must be always in the "on" position. For operation from the rear seat, the ignition switch in the front cockpit must be "on".
In addition to the ignition the ignition switches control the following functions:

a) ignition "on":
1. automatic extension of the powerplant
2. electric fuel pump "on"
3. starter motor relais unlocked (as soon as engine is extended)

b) ignition "off":
1. automatic retraction of the powerplant (as soon as propeller is aligned)
2. electric fuel pump "off"
3. starter motor relais blocked
4. activation of the automatic propellerbrake and propeller aligning system (Option)

Note: Extend the engine only via the ignition switch if you want to start the motor immediately following the extension (in the air and on the ground after landing for taxiing). Otherwise when switching off the ignition the engine will retract again (propeller aligned).

37) ff

On the ground prior to take off extend the engine via the manual switch No. 24. The automatic extension-retraction system will only be activated if the change over switch 36 was in "on" position **before** the ignition was switched "on" or "off".

This peculiarity prevents the possibility that by switching No.36 on or off the engine will be extended or retracted inadvertently. **Caution:** For passenger flying etc. it is necessary to secure the ignition switch in the rear cockpit with the securing plate. The securing plate is equiped with a quarter turn lock which must be operated with a screw driver. For storage you may install the securing plate turned downwards 180 °.

38) Control light ignition on green flashing light shines with both ignition switches "on". The light stops shining as soon as the engine RPM exceeds 1200 RPM.

39) Test switch for the two ignition circuits **test**

Switch in the middle	**I+II**	both ignition circuits activated
Switch to the left	**I**	No. I ignition circuit activated
Switch to the right	**II**	No II ignition circuit activated

The switch is spring loaded such that it will always return to the middle position (I + II).

40) Control light **engine travelling** : yellow flashing light shines as long as the engine is not in the extended or retracted position.

Note: As long as the control light is flashing you can't display the outside airtemperature (option) or the daily elapsed time indication on the DEI in the rear cockpit.

41) Control light **Prop. L** : red permanent light shines as long as the propeller is not in the correct position for retraction.

This light is coupled with the control of the engine retraction relais. Should the propeller move out of the allowable position during retraction the light will start shining and retraction is stopped automatically.

In such case you have to extend the engine again (by switching on the ignition) and to align the propeller again.

In an emergency it is possible to retract the engine with the propeller not aligned or even turning via the manual switch (see emergency procedures).

42) Control light **Gen**. : red permanent light
on = Generator not charging the battery
off = Generator charging the battery

43) Digital readout selector switch CHT/battery voltage for the right hand display
CHT °C Battery V
centre T = Cylinderhead (water) temperature
CHT displayed in °C
right B = battery voltage displayed in V.
The switch returns by itself into the T position.

44) Exhaust gas temperature EGT indication (Option).
Switch No. 43 to the left: EGT in °C is displayed on the centre display for the front cylinder and on the right hand display for the rear cylinder. **E** will be displayed on the left hand display. **E 550 545**
If the EGT of one or of both cylinders exceeds the max. permissible value of 650° C (1202° F) all 3 displays, 45, 46 and 47, start blinking and the EGT will be displayed, e.g. **E 710 705** **.**
Warning: If 650°C will be exceeded, the engine speed must be reduced so far, that the EGT's will return into their limits, to avoid engine damage. High EGT's are likely to occur in horizontal cruising flight. If the EGT's are too high in climb, this may indicate too lean a carburettor setting, or the start of piston damage.
Below 200°C **E --- ---** will be displayed if the probes are connected and working. Otherwise nothing will be displayed.

45) Display for the fuel level in the fuselage tank in liters.
Fuel **liter** :The amount displayed is the total amount in the tank less 1 l (0.26 U.S.gal.) unusable amount.
If the displayed fuel level is lower than 5 l (1.32 U.S.gal.) an L (low) is displayed in front of the liter number as a warning.
When reaching the non usable amount of fuel LL will be displayed and the display starts blinking.
Note: With a fuel level of less than 5 l (1.32 U.S.gal.) the fuel indication is no longer independent on the pitch attitude of the aircraft. If you fly with low pitch attitude less fuel than real will be displayed.
With more than 5 l (1.32 U.S.gal.) fuel the indication is nearly independent of pitch altitude due to the second fuel level probe.

46) Display for the engine speed x 10 **engine speed RPM x 10**
e.g. 602 means 6020 RPM engine speed. When exceeding the max. continuous engine speed of 6900 RPM a blinking double point will appear in front of the last digit, e.g. **6 9:1** .
When exceeding the max. engine speed of 7200 RPM the whole display starts blinking [ ] **7 2:1** .
After switching off the ignition (DEI still switched on) 3 dashes will be displayed **- - -** .
As soon as the propeller is aligned or the ignition is switched on again, the engine speed will be displayed.

- - - shows that the DEI is working in the sequence which controls the options (see item 32 automatic propellerbrake and propeller alignment) even if these options are not installed.

Caution: If **PE** is displayed instead of the engine RPM the approximity switch at the upper drive belt pulley is defective (short circuit in the switch).
With this defect the control light 41 will not work and the automatic retraction of the engine will not be activated.
You have to retract the engine with the manual switch.
A new proximity switch must be installed prior to the next engine start.

47) Display for cylinderhead temperature (cooling water temperature) CHT in °C and battery voltage to switch over with switch 43 (see also 44)

CHT °C Battery V

When exceeding the max. allowable CHT=95°C (203°F) the whole display starts blinking.
When exceeding the max. battery voltage of 14.7 V or when decreasing a voltage of 11 V the display switches over automatically to battery voltage and starts blinking. As soon as the battery voltage returns into its normal range of 11 - 14.7 V the display switches back to CHT.
The display can also be switched back to CHT by switching the switch 43 to the left or to the right.

Note:
The tolerances of the CHT indicator is max. ± 5° C. The display nevertheless is in 1° C steps to show the tendency of temperature changes.

48) Daily elapsed time indicator.

49) Press the upper button (48): The centre display (46) will show the counted engine hours and the right display (47) will show the counted engine minutes. Press the upper (48) and the lower button (49) simultaneous to set the counted engine time to zero.

7.4 Flight controls

Rudder control:
Cable system with adjustable pedals in the front cockpit.
See diagram 2 M.M.
The steerable nosewheel (Option) is connected to the rudder control with springs.

Elevator control:
All pushrods slide in maintenance free nylon ball guides.
Automatic control hook up system. Spring trimmer with release lever at the control stick and control knob at the left cockpit wall. See diagram 1 M.M.
To trim, you have to operate the release lever at the control stick and place the control knob to the desired position.

Aileron and wingflap control:
With aileron operation the wing flaps deflect with 40 % of the aileron deflection to increase manoeverability and to reduce drag. With wing flap operation aileron and wing flaps make the same deflections. The mixing of aileron and flap deflections takes place in the fuselage.
Pushrods slide in maintenance free nylon ball guides.
Automatic control hook up system. See diagram 3 and 4 M.M.

7.5 **Airbrakes** see diagram 3 and 4 M.M.

Double storey Schempp-Hirth type airbrakes on the upper wing surface. The wheel brake is operated by the airbrake system. Pushrods in the wings slide in maintenance free nylon ball guides. Automatic control hook up system.

7.6 Landing gear

see diagram 2 M.M.

a) Main wheel: retractable, assisted by a gas strut. Spring mounted with steel compression springs, locked in retracted position by an overcentre locking device. Fully sealed landing gear box, hydraulic disc brake.
Tyre 380 x 150 6 PR
Diameter 380 mm (15.0 in.)
Tyre pressure 3.0 bar (44 psi)

b) Tailwheel: Tyre 200 x 50 2 PR
Diameter 200 mm (7.87 in)
Tyre pressure 4 bar (58 psi)

c) Nosewheel: Tyre 260 x 85
Diameter 260 mm (10.2 in.)
Tyre pressure 2.5 bar (36 psi)

Option: See diagram 10 M.M.
The nose wheel is connected to the rudder control with springs.

7.5 **Tow hooks**
See diagram 5 M.M.
Safety release "Europa G 88" for winch launch installed near the C.G.
"nose release E 85" installed in the fuselage nose for aerotow.
Both hooks are operated by the same handle.

7.8 **Seats and safety harness**
The front seat is constructed as an integral inner shell.
The rear seat is height adjustable. The adjustment is by means of a strap similar to the shoulder harness.
As safety harness only symmetric 4-point harnesses fixed at the given fixing points are allowed.

7.9 **Baggage compartment**
Max. load 15 kg (33 lbs.).
Heavy pieces of baggage must to be secured to the floor.

7.10 **Waterballast system**
See diagram 6 M.M.
The wingtanks are constructed as double wall bags with a capacity of 50 l (13.2 U.S.gal) per wing. The dump valves are mounted in the wings and the control is hooked up automatically when rigging the glider.

7.11. Powerplant

7.11.1 Engine Rotax 535 C

Manufacturer:	Bombardier Rotax at Gunskirchen, Austria
Type:	Watercooled 521 ccm 2-cylinder twostroke engine with electronic dual ignition and rotary valve intake control, air intake silencer.
Take off power:	60 PS (44 KW) (max. for 5 min.) at 7200 RPM
Reduction:	3 : 1 by toothed belt

Electronically controled fuel injection for starting instead of a choke butterfly valve.

7.11.2 Propeller

MT 158 R 125 -	1 A
Manufacturer:	mt-propeller at Straubing FRG
Type:	Wooden propeller

7.11.3 Extension - retraction mechnism

Electric spindle drive with ball screw shaft. The opening and closing of the engine bay doors is automatic.

7.11.4 Automatic propeller brake and aligning of the propeller (Option)

Description see sect. 7.3 item 32

7.12 Fuel system

7.12.1 Fuselage tank 39 l (10.3 U.S.gal.) (useable amount of fuel)

Two fuel level probes are installed in the tank to allow an indication which is almost independent from the pitch angle.

7.12.2 Fuel pumps

a) electric fuel pump, controlled via the ignition switch, installed in the fuselage floor.
b) mechanical diaphragm fuel pump driven by the vacuum impulses from the crankcase.

7.12.3 Wing fuel bags (Option)

Bags with 20 l (5.3 U.S. gal.) capacity each.

7.13 Electrical system

Battery 12 V/26 Ah installed near the C.G. The main fuse is located directly at the battery box (type Bosch 1191017006, 100 A).
Battery charging by a generator which is installed in the engine. Recharging the batteries with an automatic battery charger is possible via the 12 V socket in the rear cockpit. Therefore the main switch must be in the "on" position. The change over switch in the DEI should be on "Avionik" and all instruments etc. switched off.
Warning: Use only automatic chargers designed to charge sealed lead acid batteries. To charge the battery to its full capacity an automatic charger with 14.4 V max. charging voltage is necessary (normal automatic chargers charge only up to 13.8 V). Such a charger is available through DG Flugzeugbau code no. Z08.
After charging switch off the main switch as with main switch on there is a small loss of current.
The DEI (digital engine indicator) controls all automatic and safety functions and displays the engine indications on digital displays. All current - carrying wiring confirms to LN aeronautical specifications.

7.14 Pitot and static system see diagram 8 M.M.

Pitot probe in fuselage nose, and static ports a short distance behind fuselage nose. The airspeed indicator and the altimeter are to be connected to these ports and probe. Additional holder for a Multiprobe in the fin is to operate variometer and flight computersystems. To preserve the sealings inside the holder the end of the probe should be greased with vaseline from time to time.

7.15 Canopies

To **jettison** the canopies in flight see section 3.2.
Removing a canopy:
Open the canopy, detach the restraining cable and if installed detach the gas strut from the front canopy. Then close the canopy and operate the red canopy emergency release handle (right) and the white-red canopy opening handle (left). Lift the canopy upwards.
Reinstalling a canopy:
Open emergency release and canopy locking levers. Place the canopy in vertical direction onto the fuselage. Close the emergency release. Open the canopy and snap in the retaining cable and the gas-strut (if installed).
Checking the canopy emergency release system:

a) check with open front canopy if the gas-struts (if installed) can be disengaged from their ball fittings (from canopy and from fuselage). Grease the ball fittings.
b) check with closed canopy if the emergency release handle can be operated and if the canopy can be removed easily, resp. if the canopy will be lifted by the gas-strut. Grease the locking pins.

7.16 Miscellaneous equipment (Options)

7.16.1 Removable ballast

a) up to ser.no. 5 E 139

Up to 4 ballast weights (code no. Z 10) of 2.16 kg (4.76 lbs) each can be fixed at the M 8 insert in front of the front rudder pedal mounting point. Each weight compensates a pilot mass of 3.7 kg (8.16 lbs) in the front seat. The ballast weights must be fixed with an M 8 bolt which is min. 10 mm (.4 in.) longer than the thickness of all ballast weights.

b) from ser.no. 5 E 140 on

The ballast box (Option) at the right hand side of the instrument console underneath the carpet can accomodate 3 lead ballast weights of min 2.2 kg (4.85 lbs) each. Each weight compensates a pilot mass of 2.9 kg (6.4 lbs). With 3 weights 8.7 kg (19.2 lbs) missing pilot mass can be compensated.
The lead ballast weights are to be fixed in the box with a M 8 wingnut.

7.16.2 Radio installation with automatic commutation

If the factory approved radio installation set is installed, the radio will be switched automatically from "normal" mode to "engine on" mode with the engine extended. The commutation to "engine on" mode works only with the DEI working. If the DEI is not switched on the radio will remain in the "normal" mode. With "normal mode" only the goose neck microphones are working.
With "engine on" mode the intercom system is working. Only the microphones of the headsets are working.
The loudspeaker and the speakers of the headsets are working together in both modes.

7.16.3 Oxygen system

a) Installation of the oxygen cylinders

It is possible to install two oxygencylinders with 3 l (0.8 U.S.gal.) capacity, diameter 100mm (3.94 in.) total length 575 mm (22.6 in.) (available through DG Flugzeugbau GmbH).
Installation place: one bottle in front of the rear seat and one bottle in the baggage compartment see installation plan 5 EP 31. It is mandatory to mount the oxygen bottles with the mounting parts available from DG Flugzeugbau.

7.16.3 **Oxygen system** cont.

b) Installation of the oxygen equipment

To ensure a safe installation ask DG Flugzeugbau for an installation instruction. For the installation of the Dräger Höhenatmer E 20088 you will find an installation plan 5 EP 34 in the maintenance Mamual.

7.16.4 **ELT Emergency Locator Transmitter**

To ensure a safe installation ask DG Flugzeugbau for an installation instruction. For the Pointer Inc. ELT Model 3000 you will find an installation plan 5 EP 30 in the maintenance manual.

Caution: Concerning 7.16.3 and 7.16.4

The installation has to be accomplished by the aircraft manufacturer or by an approved service station and to be inspected and entered in the aircraft log book by a licensed inspector.

7.16.5 **Heavy tailwheel**

Instead of the standard tailwheel with plastic hub a tailwheel with brass hub S 27/1 may be installed. The installation kit S 27/4 is available at DG Flugzeugbau.
The difference in mass between both hubs is 3.1 kg (6.84 lbs). With the brass hub, the min. front cockpit load is increased by 8.5 kg (18.74 lbs). This higher value must be entered in the cockpit data placards and on page 6.5. Even if the heavy tailwheel is installed only sometimes, the higher min. cockpit load must be entered.

8. Sailplane handling, care and maintenance

8.1 Introduction

This section contains manufacturer's recommended procedures for proper ground handling and servicing of the sailplane. It also identifies certain inspection and maintenance requirements which must be followed if the sailplane is to retain that new-plane performance and dependability. It is wise to follow a planned schedule of lubrication and preventive maintenance based on climatic and flying conditions encountered.

8.2 Inspection period, maintenance

The "Instructions for continued airworthiness (maintenance manual) for the DG-500M have to be followed.

A Before each rigging all the connecting pins and bushes should be cleaned and greased. This includes the control connectors.

B The contact surfaces of the canopies to the fuselage are to be rubbed with colourless floor-polish (canopy and fuselage side) to reduce grating noise in flight. Polish at the beginning of the flight season and then every month.

C Once a year all the bearings and hinges should be cleaned and greased. See the greasing programme of the maintenance manual.
Each year the control surface displacements, adjustments and general condition must be checked. (See the maintenance manual).

D Maintenance of the engine see maintenance manual sect. 3.

8.3 Alterations or repairs

It is essential that the responsible airworthiness authority be contacted **prior to** any alterations on the airplane, to ensure that the airworthiness of the sailplane is not impaired. It is prohibited to execute the alteration without the approval of the airworthiness authority. The manufacturer will not be liable for the alteration or for damages resulting from changes in the characteristics of the aircraft due to alteration. So it is strongly recommended to execute no alternatives which are not approved by the aircraft manufacturer.
External loads such as external camera installations are to be regarded as alterations! Repair instructions can be found in the DG-500M repair manual. No repairs should be carried out without referring to the manual.

8.4 Tie Down, Parking

To tie down the wings use the wing cradles of your trailer. The fuselage should be tied down just ahead of the fin. Water ballast can be left in the wings, for a few days only, but not when there is the possibility of freezing! On sunny days the cockpit should be closed and covered.
Note: Longer parking with exposure to sun and humidity will cause premature ageing of the skin of your sailplane.
Parking over night with the wing fuel tanks not emptied is prohibited.

8.5 Trailering

It is recommended to carry this valuable sailplane in a factory approved closed trailer.

Approved fitting points:
Inner wing panels:

1. Wing spar as close to wing rootrib as possible or a rootrib wing cradle.
2. A wing cradle at the taper change.

Stabilizer and outboard wing panels:
Cradles as desired.

Fuselage:

1. A felt lined fiberglass nose cap which does not extend over the canopy, secured to floor.
2. Fuselage dolly in front of the tow hook.
3. Tail wheel well in trailer floor. Secure fuselage with a belt in front of the fin or hold it down with the trailer top (soft foam in top).

All aircraft structures should not be subject to any unusual loads. With high temperatures that can occur inside trailers, these loads in time can warp any fibre reinforced plastic sailplane.

The trailer should be well ventilated so as to prevent moisture build up which could result in bubbles forming in the gelcoat. A solar powered ventilator is recommended.

8.6 Towing on the ground

a) by towing from the nose hook using a rope with the standard double ring authorized for the release.

b) by using a tow bar which is fixed at the tail dolly and a wing tip wheel.

The tow bar and wing tip wheel may be ordered through the DG Flugzeugbau factory.

8.7 Cleaning and Care

Exterior surfaces of the fibrereinforced plastic parts

The surfaces are coated by a UP-gelcoat. This gelcoat is protected by a hard wax coating which has been applied during production with a rotating disc ("schwabbel" procedure). Do not remove the wax, because this would lead to shading, swelling and cracking of the surface. In general, the wax coat is very resistant. As soon as the wax coat is damaged or worn, a new coat has to be applied (see maintenance manual sect. 3.1). If you store your aircraft often outside, this may be necessary every half year!

Hints for care:

- Wash the surface only with clear water using a sponge and chamois.

- The adhesive remains of tape may be removed with petroleum ether (pure petroleum spirit) which should be applied and removed immediately, otherwise this may lead to swelling of the gelcoat.

- More stubborn dirt which cannot be removed by washing may be cleaned off with siliconefree, wax containing car polishes (e.g. 1Z Extra, Meguiars in USA)

- Longterm dirt and shading can be removed by applying a new hard wax coat (see maintenance manual sect. 3.1).

8.7 **ff**

- Never use alcohol, acetone, thinner etc.. Do not use detergents for washing!

- Protect the surface from intense sunlight.

- Protect the aircraft from water and moisture. See sect. 8.4 and 8.5.

- Remove water that has entered and allow the aircraft to dry out.

- Never store your wet aircraft in a trailer.

Plexiglas canopy:

- Use clear water and a chamois for cleaning.

- Stubborn dirt and small scratches can be removed by use of the "schwabbel procedure" (see maintenance manual sect. 3.1).

Metal parts:

The pins and bushes for rigging the aircraft are not surface protected and must be covered with grease all the time.
The other metal parts, especially the control stick and all handles should be preserved with metal polishes occasionally.

8.8 Power plant trouble shooting

1a) **Extension and retraction doesn't work**

A. Circuit breaker popped out. Press in again
B. Defective relay
C. Defective DEI
In cases B und C use the manual extension - retraction switch

1b) **Automatic retraction doesn't work**

The proximity switch at the upper drive belt pulley is defective.
In case of a short circuit in the switch the DEI displays PE instead of the engine RPM. Refer to flight manual sect. 7.3. item 46.

2. **Engine starting problems**

Refer to flight manual sect. 4.5.1.2.

3. **Starter motor doesn't work**

Limit switch at the engine mount (see maintenance manual section 1.14.14) does not work, or defective DEI or defective starter motor.
With option level II (automatic turning of the propeller):
Power diode (see maintenance manual 1.14.17 c) defective, the battery voltage will drop, if you press the starter button. Emergency procedure see flight manual 3.11.

4. **Engine doesn't reach ground test RPM**

A. The most frequent reason is the carburettorneedle valve is not shutting off completely. Disassemble the needle valve referring to maintenance manual sect. 1.13.7 no. 1 page 27. Switch on the ignition so that a jet of fuel comes out of the valve hole to clean the valve seat. Assemble the needle valve again. (The dirt particles may be so small that you won't see them).

B. Dirt in the main nozzles see maintenance manual sect. 1.13.7 no. 2 page 27.
C. Dirt in the fuel filter replace or clean the filter, see maintenance manual sect. 3.4.1 no. 4 page 47.
D. Throttle butterfly valves don't open fully. Lubricate the bowden cables or replace them if bent.
E. Faulty ignition see 7.
F. Fuel lines clogged or kinked. Check fuel rate see maintenance manual sect. 3.5.1 item 5.
G. If the engine can't be accelerated from idle to full throttle and cleaning the carburettor (see 4 A and B) doesn't help, you should exchange the carburettor membrane and the gasket.

8.8 **ff**

5. **Fuel leaks out of the carburettors** see 4 A
6. **Loss of electrical power** see flight manual sect. 3.10.
7. **Ignition problems**
   No spark:
   - **on 1 spark plug of one ignition circuit:**
     Spark plug, ignition cable or electronic box defective.
   - **on both spark plugs of one ignition circuit:**
     Too low starting r.p.m.; weak battery; shorting cable or ignition switch having ground connection; electronic box defective: if after interchanging the boxes with the other ignition circuit the trouble appears on the other ignition circuit; if not, armature plate (in the engine) or cables may be defective.
   - **on none of the spark plugs:**
     too low starting r.p.m.; weak battery; shorting cable or ignition switch having ground connection; cable defective; If after interchanging the boxes with the other ignition circuit one circuit will function again, one electronic box and the armature plate are defective.
8. **Engine becomes too hot**
   Carburettor fuel nozzles clogged
   Fuel lines clogged
   Fuel filter dirty
   Cooling system defective
   Not enough cooling liquid
   Radiator clogged
   Pump impeller loose or defective
   Cooling water lines clogged
   Spark plugs defective
   Ignition timing not correct
9. **Disturbance of rear DEI indicators**
   This suggests that strong electromagnetic interference acts on the data transmission lines.
   With Bosch electronic boxes:
   Remove the plugs from the electronic boxes and pull off the rubber protective caps. Check if wires have been loose from the metal plugs or if the metal shielding has come loose.
10. **Sudden power loss at full throttle**
    Check pistons and cylinders for seizing marks, see maintenance manual sect. 3.5 item 13.

9. Supplements

9.1 Introduction

This section contains the appropriate supplements necessary to safely and efficiently operate the sailplane when equipped with various optional systems and equipment not provided with the standard sailplane.

9.2 List of inserted supplements

Date of insertion	Document No.	Title of the inserted supplement
May 2010	Section 9.3	Special equipment for very small pilots TN500/02

9.3 Special equipment for very small pilots (TN500/02)

To facilitate the operation of the glider by very small pilots 3 different items have been developed, which may be used separately or together.

9.3.1 Removable seat back for the front seat

a) Installation of the seat back: Install the seat back with 2 screws M6x16 DIN965 4.8 BIC with cup washers 15 x M6 MS NI NR4157 to the threads which have been installed according to working instruction No. 1 for TN500/02.
b) The seat back may be adjusted further to the front by part Z198. Fix the part to the Velcro straps installed at the rear of the seat back.
c) Remove the head rest from the seat (screwed connection) and install a head cushion 8R80/2 to the Velcro straps installed at the front of the seat back. When removing the seat back reinstall the headrest.

9.3.2 Airbrake-pushrod with additional handle in front cockpit

For pilots with arms too short to lock the airbrakes an airbrake-pushrod with additional handle part 5St69/2 may be instead in the front cockpit according to working instruction No. 2 for TN500/02 instead of part 5St69.
This part may remain in the glider for normal operation.

9.3.3 Rudder pedal plates for rear cockpit Z197

Pilots with very short legs may clip rudder pedal plates part no. Z197 on to the rudder pedals. Plates may be installed and removed as often as desired.