SCHEMPP-HIRTH FLUGZEUGBAU GmbH, KIRCHHEIM/TECK

F L I G H T M A N U A L

for powered Sailplane

Variant: **D i s c u s – 2 c F E S**

Serial-No.:

Registr.-No.:

Date of issue: **J a n u a r y 2 0 1 6**

This Flight Manual is EASA approved by

Type Certificate EASA.A.050 issued July 31th, 2017.

This powered sailplane is to be operated in compliance with information and limitations contained herein.

Approval of translation has been done by best knowledge and judgement.
In any case the original text in German language is authoritative.

0.1 Record of revisions

Any revisions of the present manual, except actual weighing data, must be recorded in the following table and in the case of approved sections be endorsed by the responsible airworthiness authority.

The new or amended text in the revised page will be indicated by a black vertical line in the left hand margin, and revision number and the date will be shown on the bottom left hand side of the page.

0.1 Erfassung der Berichtigungen/*Records of revisions*

Lfd. Nr. der Berichtigung	Abschnitt	Seite	Ausgabe-datum	Bezug	Datum der Einarbeitung	Zeichen/ Unterschrift
Revision No.	*Affected section*	*Affected page*	*Date of issue*	*Reference*	*Date of Insertion*	*Signature*

ÄB / MB: Änderungsblatt – *Modification Bulletin*
TM / TN: Technische Mitteilung – *Technical Note*

Hinweis: Nicht eingefügte Berichtigungen sind zu streichen.
Das Verzeichnis der Seiten ist gegebenenfalls handschriftlich zu aktualisieren.

Note: Cross out revisions which are not included.
The list of effective pages must be amended by hand if necessary.

0.2 Verzeichnis der Seiten/*List of effective pages*

Abschnitt *Affected section*	Seite *Affected pages*	Ausgabedatum *Date of issue*	Bezug *Reference*
0	0.1.1 0.1.2	January 2016	
	0.2.1 0.2.2 0.2.3 0.2.4 0.2.5 0.2.6 0.2.7		
	0.3.1	January 2016	

ÄB / MB: Änderungsblatt – *Modification Bulletin*
TM / TN: Technische Mitteilung – *Technical Note*

0.2 Verzeichnis der Seiten/*List of effective pages*

Abschnitt *Affected section*	Seite *Affected pages*	Ausgabedatum *Date of issue*	Bezug *Reference*
1	1.1.1	January 2016	
	1.1.2	January 2016	
	1.2	January 2016	
	1.3	January 2016	
	1.4.1	January 2016	
	1.4.2	January 2016	
	1.4.3	January 2016	
	1.5	January 2016	
2	2.1.1	January 2016	
	2.1.2	January 2016	
	appr. 2.2	January 2016	
	appr. 2.3	January 2016	
	appr. 2.4	January 2016	
	appr. 2.5	January 2016	
	appr. 2.6	January 2016	
	appr. 2.7	January 2016	
	appr. 2.8	January 2016	
	appr. 2.9	January 2016	
	appr. 2.10	January 2016	
	appr. 2.11.1	January 2016	
	appr. 2.11.2	January 2016	
	appr. 2.12	January 2016	
	appr. 2.13	January 2016	
	appr. 2.14	January 2016	
	appr. 2.15	January 2016	

ÄB / MB: Änderungsblatt – *Modification Bulletin*
TM / TN: Technische Mitteilung – *Technical Note*

0.2 Verzeichnis der Seiten/*List of effective pages*

Abschnitt *Affected section*	Seite *Affected pages*	Ausgabedatum *Date of issue*	Bezug *Reference*
3	3.1.1	January 2016	
	3.1.2	January 2016	
	appr. 3.2	January 2016	
	appr. 3.3	January 2016	
	appr. 3.4	January 2016	
	appr. 3.5	January 2016	
	appr. 3.6	January 2016	
	appr. 3.7	January 2016	
	appr. 3.8	January 2016	
	appr. 3.9.1	January 2016	
	appr. 3.9.2	January 2016	

ÄB / MB: Änderungsblatt – *Modification Bulletin*
TM / TN: Technische Mitteilung – *Technical Note*

0.2 Verzeichnis der Seiten/*List of effective pages*

Abschnitt *Affected section*	Seite *Affected pages*	Ausgabedatum *Date of issue*	Bezug *Reference*
4	4.1.1	January 2016	
	4.1.2	January 2016	
	appr. 4.2.1.1	January 2016	
	appr. 4.2.1.2	January 2016	
	appr. 4.2.1.3	January 2016	
	appr. 4.2.2	January 2016	
	appr. 4.3.1	January 2016	
	appr. 4.3.2	January 2016	
	appr. 4.3.3	January 2016	
	appr. 4.3.4	January 2016	
	appr. 4.3.5	January 2016	
	appr. 4.4	January 2016	
	appr. 4.5.1.1	January 2016	
	appr. 4.5.1.2	January 2016	
	appr. 4.5.1.3	January 2016	
	appr. 4.5.1.4	January 2016	
	appr. 4.5.2	January 2016	
	appr. 4.5.3.1	January 2016	
	appr. 4.5.3.2	January 2016	
	appr. 4.5.3.3	January 2016	
	appr. 4.5.3.4	January 2016	
	appr. 4.5.3.5	January 2016	
	appr. 4.5.3.6	January 2016	
	appr. 4.5.3.7	January 2016	
	appr. 4.5.4	January 2016	
	appr. 4.5.5	January 2016	
	appr. 4.5.6.1	January 2016	
	appr. 4.5.6.2	January 2016	
	appr. 4.5.6.3	January 2016	
	appr. 4.5.6.4	January 2016	
	appr. 4.5.6.5	January 2016	
	appr. 4.5.7.1	January 2016	
	appr. 4.5.7.2	January 2016	
	appr. 4.5.8	January 2016	
	appr. 4.5.9	January 2016	

ÄB / MB: Änderungsblatt – *Modification Bulletin*
TM / TN: Technische Mitteilung – *Technical Note*

0.2 Verzeichnis der Seiten/*List of effective pages*

Abschnitt *Affected section*	Seite *Affected pages*	Ausgabedatum *Date of issue*	Bezug *Reference*
5	5.1.1	January 2016	
	5.1.2	January 2016	
	appr. 5.2.1	January 2016	
	appr. 5.2.2	January 2016	
	appr. 5.2.3	January 2016	
	appr. 5.2.4	January 2016	
	5.3.1	January 2016	
	5.3.2.1	January 2016	
	5.3.2.2	January 2016	
	5.3.2.3	January 2016	
	5.3.2.4	January 2016	
	5.3.2.5	January 2016	
	5.3.3	January 2016	
6	6.1.1	January 2016	
	6.1.2	January 2016	
	6.2.1	January 2016	
	6.2.2	January 2016	
	6.2.3	January 2016	
	6.2.4	January 2016	
	6.2.5	January 2016	
	6.2.6	January 2016	
	6.2.7	January 2016	
	6.2.8	January 2016	

ÄB / MB: Änderungsblatt – *Modification Bulletin*
TM / TN: Technische Mitteilung – *Technical Note*

0.2 Verzeichnis der Seiten/*List of effective pages*

Abschnitt *Affected section*	Seite *Affected pages*	Ausgabedatum *Date of issue*	Bezug *Reference*
7	7.1.1	January 2016	
	7.1.2	January 2016	
	7.2.1	January 2016	
	7.2.2	January 2016	
	7.2.3	January 2016	
	7.2.4	January 2016	
	7.2.5	January 2016	
	7.2.6	January 2016	
	7.3.1	January 2016	
	7.3.2	January 2016	
	7.4	January 2016	
	7.5	January 2016	
	7.6	January 2016	
	7.7	January 2016	
	7.8	January 2016	
	7.9.1	January 2016	
	7.9.2	January 2016	
	7.9.3	January 2016	
	7.10	January 2016	
	7.11	January 2016	
	7.12.1	January 2016	
	7.12.2	January 2016	
	7.12.3	January 2016	
	7.13	January 2016	

ÄB / MB: Änderungsblatt – *Modification Bulletin*
TM / TN: Technische Mitteilung – *Technical Note*

0.2 Verzeichnis der Seiten/*List of effective pages*

Abschnitt *Affected section*	Seite *Affected pages*	Ausgabedatum *Date of issue*	Bezug *Reference*
8	8.1.1	January 2016	
	8.1.2	January 2016	
	8.2.1	January 2016	
	8.2.2	January 2016	
	8.3	January 2016	
	8.4	January 2016	
	8.5.1	January 2016	
	8.5.2	January 2016	
9	9.1.1	January 2016	
	9.1.2	January 2016	
	9.2		

ÄB / MB: Änderungsblatt – *Modification Bulletin*
TM / TN: Technische Mitteilung – *Technical Note*

0.3 Table of contents

	Section
General (a non-approved section)	1
Limitations (an approved section)	2
Emergency procedures (an approved section)	3
Normal operating procedures (an approved section)	4
Performance (a partly approved section)	5
Weight (mass) and balance (a non-approved section)	6
Description of the aircraft and its systems (a non-approved section)	7
Aircraft handling, care and Maintenance (a non-approved section)	8
Supplements	9

Section 1

1. General

1.1 Introduction

1.2 Certification basis

1.3 Warnings, cautions and notes

1.4 Descriptive data

1.5 Three-side view

1.1 Introduction

The Flight Manual for this powered sailplane has been prepared to provide pilots and instructors with information for the safe and efficient operation of the powered sailplane.

This manual includes the material required to be furnished to the pilot by „JAR“, Part 22.It also contains supplemental data supplied by the manufacturer of the aircraft.

1.2 Certification basis

This non-self-launching powered sailplane, model designation

D i s c u s – 2 c F E S

has been approved by EASA in compliance with

„JAR“, Part 22 effective on June 27, 1989
(Change 4 of the English Original Issue)
- including additional Amendment 22/90/1 and
- Suplement I of Amendment 22/91/1 and
- Special Conditions SC-22.2014-01, dated 30 July 2015

Type Certificate Data Sheet No. **EASA.A.050**.

The restricted variant Discus-2cFES was certificated on

July 31th, 2017.

Category of Airworthiness: “UTILITY”

1.3 Warnings, cautions and notes

The following definitions apply to warnings, cautions and notes used in this flight manual:

„**WARNING**“	means that the non-observation of the corresponding procedure leads to an immediate or important degradation of the flight safety
„**CAUTION**“	means that the non-observation of the corresponding procedures leads to a minor or to a more or less long term degradation of the flight safety
„**NOTE**“	draws the attention on any special item not directly related to safety, but which is important or unusual

1.4 Descriptive data

The Discus-2cFES is a single-seat high performance powered sailplane (not capable of self-launching) constructed from fiber reinforced plastic (FRP), featuring a T-tail (fixed horiz. stabilizer with elevator).
It can be flown in 15m or 18m configuration.

Wing

The four-piece (15 m or 18 m) wing with winglets (having a swept-back leading edge) is four stage trapezoid in planform and has double-panel Schempp-Hirth type airbrakes on the upper surface.
The integral water ballast tanks have a total capacity of approx. 200 liter (52.84 US Gal., 44.00 IMP Gal.) in the inboard wing panel.

The wing shells are a GFRP/CFRP/foam-sandwich construction with spar flanges of carbon fiber rovings and shear webs made from GFRP/foam-sandwich.

Fuselage

The cockpit is comfortable – the pilot has a semi-reclining position. A one-piece canopy hinges sideways and opens to the right.
The fuselage is constructed as a pure carbon/aramid fiber non-sandwich shell and is thus highly energy absorbing. While its aft section is stiffened by GFRP/foam-sandwich bulkheads and webs, the cockpit region is reinforced by a double skin on the sides, with integrated canopy coaming frame and seat pan mounting flanges. The sprung undercarriage is retractable and features a mechanical or hydraulic wheel brake; the tail wheel is fixed.

Horizontal tailplane

The horizontal tailplane consists of a fixed stabilizer with elevator. The stabilizer is a GFRP/CFRP/foam-sandwich construction, the elevator halves are a pure GFRP/CFRP shell. The spring trim is gradually adjustable by a lever resisting against a threaded rod.

Vertical tail

Fin and rudder are constructed as a GFRP/foam-sandwich.
On request a water ballast trim tank with a capacity of 8.0 liter (2.11 US Gal., 1.76 IMP. Gal.) is provided in the fin.

Controls

All controls are automatically hooked up when the aircraft is rigged.

The auxiliary power system

The auxiliary power system is to avoid tedious retrieves or to overcome zero lift conditions, but it also makes soaring safaris and wave exploratory flights possible after a winch launch or aerotow.

Off-field landings may now be safely avoided and even if the system fails, the sink rate with rotating propeller is marginal.

Starting the engine is very simple and is done with the aid of the throttle knob in the FCU instrument.

After starting the engine the two-blade folding propeller opens by centrifugal moment. Engine power is set by rotating the throttle knob in clockwise direction in the FCU instrument.

The engine is stopped at normal speed by rotating the throttle knob in counter clockwise direction over zero power.
After the engine has stopped and the positioning of the propeller blades is done the propeller blades are folded at the side of the fuselage nose.

Except for the power switch and the FCU instrument no other engine controls are to be observed.
Remaining useful engine time is displayed in MINUTES respective as percent bar on the FCU instrument.

For flights in the plain sailplane configuration the propeller blades and the engine batteries can be removed of course according the instructions in the Maintenance Manual of the Discus-2cFES.

NOTE:

A new weight and balance according the instructions in the Maintenance Manual must be established because of the change of the empty weight C.G.

Technical Data

Wing

Span	15.00 m 49.21 ft	18.00 m 59.06 ft
Area	10.16 m² 109.32 ft²	11.39 m² 122.56 ft²
Aspect ratio	22.20	28.50
MAC	0.715 m 2.35 ft	0.685 m 2.25 ft

Fuselage

Length	6.81 m 22.34 ft
Width	0.62 m 2.03 ft
Height	0.81 m 2.66 ft

Weights (Mass)

Empty weight (mass) approx.:	335 kg 739 lb	345 kg 761 lb
With propeller and batteries removed:	305 kg 672 lb	315 kg 695 lb
Maximum all-up weight (mass):	525 kg 1157 lb	565 kg 1246 lb
Wing loading range:	36.9 – ca. 52 kg/m² 7.6 – ca. 10.6 lb/ft²	36.4 – ca. 50 kg/m² 7.5 – ca. 10.2 lb/ft²

1.5 Three-side view

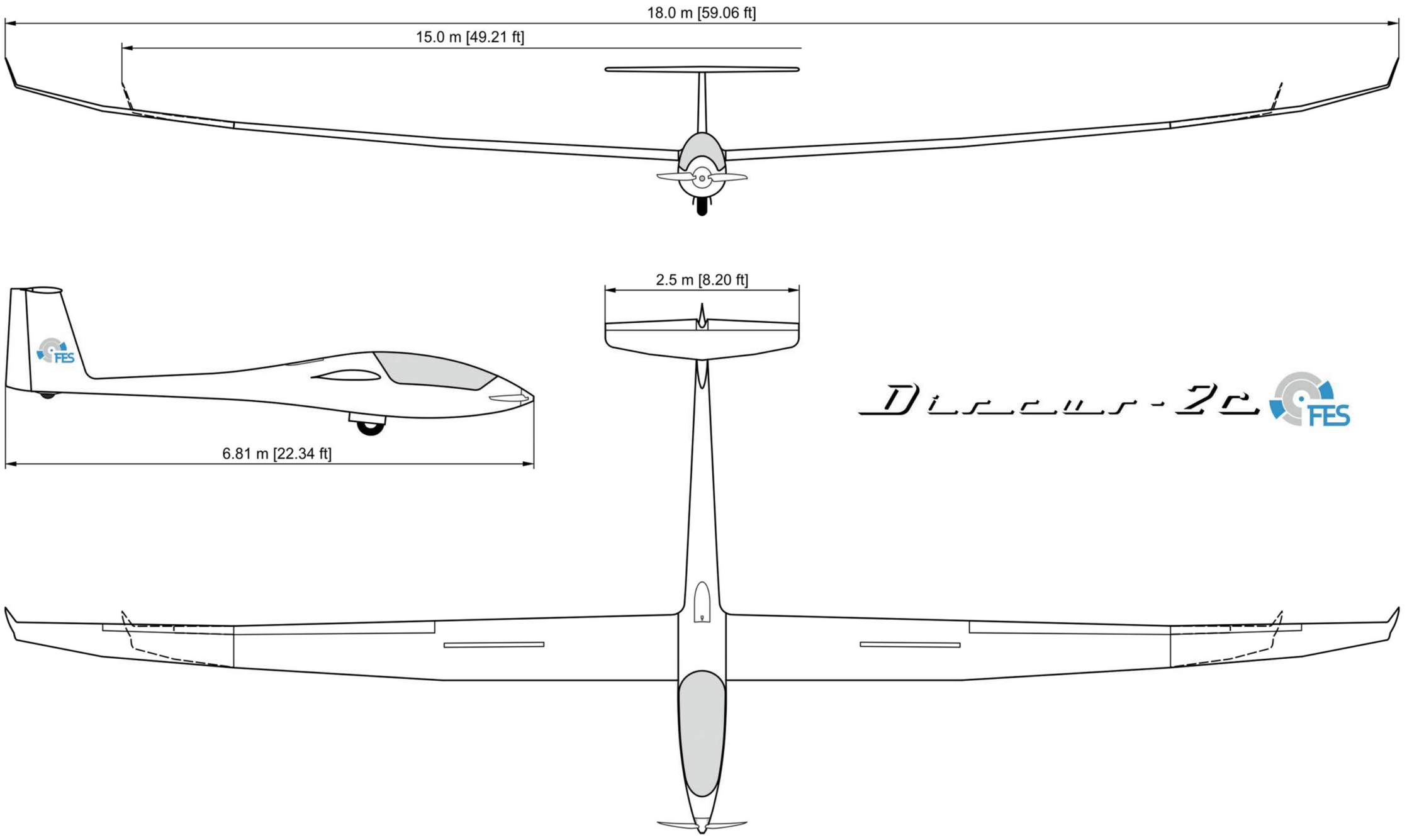

Section 2

2. Limitations

2.1 Introduction

2.2 Airspeed

2.3 Airspeed indicator markings

2.4 Power plant

2.5 Power plant instrument markings

2.6 Weights (masses)

2.7 Center of gravity

2.8 Approved maneuvers

2.9 Maneuvering load factors

2.10 Flight crew

2.11 Kinds of operation

2.12 Minimum equipment

2.13 Aerotow and winch launch

2.14 Other limitations

2.15 Limitation placards

2.1 Introduction

Section 2 includes operating limitations, instrument markings and basic placards necessary for safely operating the powered sailplane, with its standard systems and standard equipment.

The limitations included in this section and in section 9 have been approved by the EASA.

2.2 Airspeed

Airspeed limitations and their operational significance are shown below:

	Speed	(IAS)	Remarks
V_{NE}	Never exceed speed in calm air	280 km/h 151 kt 174 mph	Do not exceed this speed in any operation and do not use more than 1/3 of control deflection.
V_{RA}	Rough air speed	190 km/h 103 kt 118 mph	Do not exceed this speed except in smooth air, and then only with caution. Rough air is met in lee-wave rotors, thunderclouds etc.
V_A	Maneuvering speed	190 km/h 103 kt 118 mph	Do not make full or abrupt control movements above this speed as the aircraft structure might get overstressed.
V_T	Maximum speed on aerotow	170 km/h 92 kt 106 mph	Do not exceed this speed during an aerotow.
V_W	Maximum winch launch speed	150 km/h 81 kt 93 mph	Do not exceed this speed during a winch launch.
V_{LO}	Maximum landing gear operating speed	180 km/h 97 kt 112 mph	Do not extend or retract landing gear above this speed.
V_{POmax}	Maximum speed for starting the engine and with running engine	160 km/h 86 kt 99 mph	Do not use the engine outside this speed range.

2.3 Airspeed indicator markings

Airspeed indicator markings and their colour code significance are shown below:

Marking	Value or Range (IAS)	Significance
Green arc	95 - 190 km/h 51 - 103 kt 59 - 118 mph	Normal operating range (lower limit is 1.1*stalling speed at maximum mass and c/g in most forward position; upper limit is the max. permissible speed in rough air.)
Yellow arc	190 - 280 km/h 103 - 151 kt 118 - 174 mph	Maneuvers must be conducted with caution and operating in rough air is not permitted.
Red line at	280 km/h 151 kt 174 mph	Maximum speed for all operations.
Blue line at	95 km/h 51 kt 59 mph	Speed V_Y for best rate of climb without water ballast
Yellow triangle at	110 km/h 59 kt 68 mph	Approach speed at maximum mass without water ballast.

2.4 Power plant

Engine manufacturer:	Schempp-Hirth Flugzeugbau GmbH 73230 Kirchheim/Teck, Germany
Engine model:	FES-DIS-M100
Power (MSL, ISA): Max. continuous power	16 kW
Maximum power:	22 kW
Maximum permissible motor temperature	90 °C (194 °F)

Propeller manufacturer:	Schempp-Hirth Flugzeugbau GmbH 73230 Kirchheim/Teck, Germany
Propeller model:	FES-DIS-P1-102
Reduction ratio:	1 : 1
Max. RPM:	4500 RPM

Batteries:

Max. voltage of both batteries	116 V
Min. voltage of both batteries	90 V

2.5 Power plant instrument markings

Power plant instrument markings and their colour code significance are shown below:

FCU-Instrument	Green Normal Range	Yellow Caution Range	Red Limit
Battery Voltage (V)	white display	95 - 91 yellow warning	90 and below red warning
Motor Speed (RPM)	white display	4300 - 4400 yellow warning	from 4500 red warning
Motor Temperature (°C)	white display	70 - 89 yellow warning	from 90 red warning
Motor Controller Temperature (°C)	white display	70 - 89 yellow warning	from 90 red warning
Battery Temperature (°C)	white display	45 - 54 yellow warning	from 55 red warning from 75 red warning (land immediately)

2.6 Weights (masses)

Wing span	15 m 49.21 ft	18 m 59.06 ft
Maximum permitted take-off mass	525 kg 1157 lb	565 kg 1246 lb
Maximum permitted landing mass	525 kg 1157 lb	565 kg 1246 lb
Maximum permitted take-off and landing mass without water ballast	455 kg 1003 lb	500 kg 1102 lb
Lowest permitted take-off mass	370 kg 816 lb	370 kg 816 kg
Maximum permitted mass of all non-lifting parts	305 kg 671 lb	305 kg 671 lb
Maximum permitted minimum cockpit load:	95 kg 209 lb	95 kg 209 lb
Lowest permitted minimum cockpit load:	70 kg 154 lb	70 kg 154 lb
Maximum permitted mass in baggage compartment, see page 7.8	2 kg 4,4 lb	2 kg 4,4 lb

2.7 Center of gravity

Center of gravity in flight

Aircraft attitude:	Tail raised up such that a wedge-shaped block, 100 : 4.5, placed on the rear top fuselage, is horizontal along its upper edge
Datum:	Wing leading edge at root rib
Maximum forward c/g position:	280 mm (11.02 in.) aft of datum
Maximum rearward c/g position:	420 mm (16.54 in.) aft of datum

It is extremely important that the maximum rearward c/g position is not exceeded. This requirement is met when the minimum seat load is observed. The minimum seat load is given in the loading table and is shown by a placard in the cockpit. A lower seat load must be compensated by ballast – see section 6.2 „Weight and Balance Record / Permitted Payload Range“.

2.8 Approved maneuvers

The powered sailplane is certified in category

U t i l i t y,

not capable of self-launching

The following aerobatic maneuvers (to be conducted only **without water ballast, without engine batteries and without propeller blades** up to a **maximum all-up mass of 410 kg (902 lb)** with 18 m (59.06 ft) respective 15 m (49.21 ft) wing span)

a) Inside loops
b) Stalled turns
c) Lazy eight

It is recommended that in addition to the instrumentation given in section 2.12 an accelerometer (3 hands, resettable) is installed.

2.9 Maneuvering load factors

The following maneuvering load factors must not be exceeded:

a) With airbrakes locked

at V_A = 190 km/h, 103 kt, 118 mph

n = + 5,3

n = - 2,65

at V_{NE} = 280 km/h, 151 kt, 174 mph

n = + 4,0

n = - 1,5

b) With airbrakes extended

n = + 3,5

n = 0

2.10 Flight crew

The Discus-2cFES is single-seated.

Observe the minimum seat load.

If necessary, ballast must be installed to bring the load up to a permissible figure. See also section 6.2 “Weight and Balance Record / Permitted Payload Range”.

2.11 Kinds of operation

This powered sailplane is approved for

1. V F R - flying in daytime

2. Cloud flying
   (to be conducted only **without water ballast** and
   up to a **maximum all-up weight (mass)** of
   410 kg (902 lb) with 18 m (59.06 ft) wing span respectively
   455 kg (1001 lb) with 15 m (49.21 ft) wing span)

3. Restricted aerobatics
   (to be conducted only **without water ballast,**
   without engine batteries and **without propeller blades**
   up to a **maximum all-up weight (mass)** of
   410 kg (902 lb) with 18 m (59.06 ft) respective 15 m (49.21 ft)
   wing span)

with the prescribed minimum equipment installed (see page 2.12).

Outer wing panels for 15 m (49.21 ft) span

The outer wing panels for 15 m (49.21 ft) span are optional.

If the Discus-2cFES is equipped with outer wing panels for 15 m span the change of the configuration to 18 m (59.06 ft) wing span is eligible within the limits of this Flight Manual.

CAUTION:

If the Discus-2cFES has no outer wing panels for 15 m (49.21 ft) span and should be equipped afterwards with these wing panels than this is a modification in the sense of a maintenance work which requires an aircraft certificate of release to service.

Operation only in sailplane configuration:

If the Discus-2cFES should be operated only in sailplane configuration the following parts are allowed to remove:

1. both propeller blades

or

2. both propeller blades and both engine batteries

Instructions for the installation or removal of parts of the power plant are given in the Maintenance Manual.

CAUTION:

The installation or removal of parts of the power plant is a modification in the sense of a maintenance work which requires an aircraft certificate of release to service.
The entrance of the changed weighing data in the weight and balance log sheet on page 6.2.3 or 6.2.4 of the Flight Manual is required.

2.12 Minimum equipment

Instruments and other basic equipment must be of an approved type and should be selected from the list in the Maintenance Manual.

a) Normal operations

1 Airspeed indicator (range up to 300 km/h, 162 kt, 186 mph) with colour markings according page 2.3
1 Altimeter
1 Outside air temperature indicator (OAT) with sensor (when flying with water ballast; red line at + 2 °C, 35.6 °F)
1 Magnetic compass
1 Engine control unit (FCU instrument) indicating
- throttle knob
- RPMs
- remaining engine time
- battery voltage
- temperature of engine, controller and batteries
- total engine time

1 Four-piece safety harnesses (symmetrical)
1 Automatic or manual parachute
or
1 Back cushion (thickness approx. 10cm / 3.9 in. when compressed)

CAUTION:

The sensor for the OAT must be installed in the undercarriage box. For structural reasons the weight (mass) of the instrument panel with instruments in place must not exceed 10 kg (22 lb).

b) Cloud flying

In addition to the minimum equipment listed under a) the following is required:
Turn and bank indicator with slip ball
Variometer
VHF-Transceiver

NOTE:

From experience gained to date it appears that the airspeed indicator system installed remains fully operational when flying in clouds.

Recommended additional equipment
for cloud flying
Artificial horizon an clock

for restricted aerobatics
Accelerometer (3 hands, resettable)

2.13 Aerotow and winch launch

Aerotow (engine stopped or in sailplane configuration)

- only permissible with tow release in front part of the fuselage in place -

Maximum towing speed:	170 km/h	(92 kt, 106 mph)
Weak link in tow rope:	max. 735 daN	(max. 1620 lb)
Minimum length of tow rope:	30 m	(98 ft)
Tow rope material:	Hemp or Nylon	

Winch launch (engine stopped or in sailplane configuration)

- only permissible with c/g tow release in place –

Maximum launching speed:	150 km/h	(81 kt, 93 mph)
Weak link in winch cable	max. 735 daN	(max. 1620 lb)

2.14 Other limitations

- Below +2 °C (36 °F) outside temperature no water ballast may be used.

- Life time of the airframe:

  1. Time limits:
     When the aircraft has reached a maximum of 6000 hours of service time, a special inspection of the airframe must be accomplished in accordance with the inspection program for the extension of the allowed service time. If the results of this special inspection, possibly after proper repair of detected defects, are satisfactory, the allowed service time is increased by 3000 hours up to a maximum of 9000 hours in total.
     Thereafter the special inspection in accordance with the above mentioned inspection program must be repeated in intervals not exceeding 1000 hours. If the results are satisfactory and the detected defects properly repaired, the allowed service time may be increased step by step at each inspection by 1000 hours up to a maximum of 12000 hours in total.

  2. The instructions given in the Maintenance Manual section 3.3 regarding the inspection procedure for the extension of the allowed service time must be observed.

2.15 Limitation placards

MAXIMUM PERMITTED ALL-UP WEIGHT (MASS)	
For 18 m span	1246 lb / 565 kg
For 15 m span	1157 lb / 525 kg

MAXIMUM PERMITTED SPEEDS (IAS):	km/h	kt	mph
Maximum speed	280	151	174
Rough air speed	190	103	118
Maneuvering speed	190	103	118
Aerotowing speed	170	92	106
Winch launching speed	150	81	93
Landing gear operating speed	180	97	112
Starting the power plant	160	86	99
Power plant operating speed	160	86	99

Max. permitted speed				
Altitude [m]	Altitude [ft]	V_{NE}(IAS) km/h	V_{NE}(IAS) kt	V_{NE}(IAS) mph
0-2000	0-6562	280	151	174
3000	9843	267	144	166
4000	13123	253	137	157
5000	16404	240	130	149
6000	19685	227	122	141
7000	22966	215	116	134
8000	26247	203	110	126
9000	29528	191	103	119
10000	32808	180	97	112

LOAD ON PILOT'S SEAT (pilot and parachute)	
Minimum load:	**70*** kg / **154*** lb
Maximum load:	**110*** kg / **243*** lb
For seat loads below placarded minimum refer to Flight Manual, section 6.2	

*) Values as an example, the actually applicable values - see Flight Manual log chart section 6.2 - must be entered.

WEAK LINK FOR TOWING	
Maximum 735 daN (1620 lb)	
TIRE PRESSURE	
Main wheel:	4.0 bar (58 psi)
Tail wheel:	2.5 bar (36 psi)

NOTE:

For further placards refer to Maintenance Manual Discus-2cFES.

Section 3

3 Emergency procedures

3.1 Introduction

3.2 Canopy jettisoning

3.3 Bailing out

3.4 Stall recovery

3.5 Spin recovery

3.6 Spiral dive recovery

3.7 Engine failure

3.8 Fire

3.9 Other emergencies

3. Emergency procedures

3.1 Introduction

Section 3 provides check lists and amplifies procedures for coping with emergencies that may occur.

Emergency situations can be minimized by proper pre-flight inspections and maintenance.

3.2 Jettisoning the canopy

The canopy is to be jettisoned as follows:

Swing red locking lever (situated on the canopy frame on the left) **backward** (about 90°) up to its stop and swing canopy sideways fully open.

The canopy will then be torn out from its hinges by the airstream and gets carried away.

3.3 Bailing out

For bailing out, first the engine should be stopped, than the canopy is jettisoned.

With the canopy gone (see section 3.2), the pilot may bail out as follows:

- Actuate release buckle of restraint system
- Bend upper part of body slightly forward
- Grab canopy coaming frame on fuselage with both hands and lift body (legs will make the instrument panel tilt-up)
- Leave the cockpit to the left
- Pull rip cord of manual parachute at a safe distance and height

3.4 Stall recovery

a) Engine stopped

On stalling whilst flying straight ahead or in a banked turn, normal flying attitude is regained by firmly easing the control stick forward and, if necessary, applying opposite rudder and aileron.

b) Engine running

With engine running, there are only small differences in the stall behaviour.

CAUTION:

If, on stalling, the vibration in the controls and in the cockpit becomes more pronounced with controls getting spongy and propeller noise increasing, immediately release the back pressure on the stick and, if necessary, apply opposite rudder and aileron.

3.5 Spin recovery

A safe recovery from a spin is affected by the following method:

a) Hold aileron neutral

b) Apply opposite rudder, i.e. against the direction of rotation of the spin

c) Ease control stick forward until rotation ceases and the airflow is restored

d) Centralize rudder and pull gently out of dive

With the center of gravity in rearward positions, a steady spinning motion is possible.
After having applied the standard recovery method, the aircraft will stop rotating after about ¼ to ¾ of a turn.

The loss of height – from the point at which recovery is initiated to the point at which horizontal flight is first regained – can be about 140 to 200 m / 459 to 656 ft (with water ballast up to 240 m / 787 ft) and the recovery speeds are between 150 and 175 km/h (81 - 94 kt, 93 - 109 mph), with water ballast up to 240 km/h (130 kt, 149 mph).

With the center of gravity in the foremost position, a steady spinning motion is not possible. The aircraft stops rotating after half a turn and usually enters a spiral dive.
Recovery is by normal use of opposite controls.

CAUTION:

Spinning may be safely avoided by following the actions given in section 3.4 “Stall recovery”.

3.6 Spiral dive recovery

Depending on the use of the controls, a spin may turn into a spiral dive, if the center of gravity is in a forward position.
This is indicated by a rapid increase in speed and acceleration.

Recovery form a spiral dive is achieved by easing the control stick forward and applying opposite rudder and aileron.

WARNING:

When pulling out of the dive, the permissible control surface deflections at V_A / V_{NE} are to be observed (see also page 2.2.1).

3.7 Engine failure

From experience gained to date, no engine failure has yet occurred on the engine installed.

Should the engine fail in flight the throttle knob on the FCU instrument should be rotated counter clockwise over zero throttle and the power switch OFF.

If the propeller is still turning, landing is performed on main and tail wheel. Braking is done carefully to avoid that the propeller touches the ground.

(For more precise data refer to section 5).

3.8 Fire

- STOP engine at once
- Power switch OFF
- FCU instrument OFF
- Ventilation in fuselage nose OPEN
- Side window OPEN

WARNING:

Discontinue flight and land immediately!
Avoid any maneuvers causing a high stressing of the fuselage!

3.9 Other emergencies

Flying with uneven water ballast

If, on dumping water ballast, the wing tanks are emptying unevenly or only on one side – which is recognized at lower speeds by having to apply opposite aileron for normal flying attitude.

Entering a stall must be avoided.

When landing in this condition, the touch down speed must be increased by about 10 km/h (5 kt, 6 mph) and the pilot must be prepared for the powered sailplane to veer off course as the heavier wing tends to drop somewhat sooner than normal (apply opposite aileron).

Emergency landing with retracted undercarriage

An emergency landing with the main wheel retracted is on principle not recommended, because the potential energy absorbtion of the landing gear is many times higher as compared to the fuselage shell.

Should the wheel fail to extend, the aircraft should be landed at a flat angle and without pancaking.

Ground loop

If there is the danger of the aircraft overshooting the boundary of the landing field in mind, a decision whether or not to initiate a controlled ground loop should be made at least about 40 m (131 ft) away from the boundary:

- If possible, always turn into the wind
- as the wing tip is forced down, push the control stick forward simultaneously

Emergency water landing

WARNING:

It must be switched off
- Power switch and
- FCU instrument

From experience gained from composite sailplane landings on water following recommendations can be given:

Approach:

- landing pattern parallel to the shore
- undercarriage extended
- ventilation in fuselage nose, cockpit- and side ventilation closed
- water ballast tanks valves closed
- main switch and avionic switch OFF

Landing:

- Touch down with minimum speed and airbrakes retracted

Section 4

4. Normal operating procedures

4.1 Introduction

4.2 Assembly

4.2.1 Rigging and de-rigging

4.2.2 Installing and removing engine batteries

4.3 Inspections

4.4 Pre-flight inspection

4.5 Normal operating procedures and recommended speeds

4.5.1 Methods of launching

4.5.2 Take-off and climb

4.5.3 Flight / Cross country flight (including in-flight engine stop / start procedures)

4.5.4 Approach

4.5.5 Landing

4.5.6 Flight with water ballast

4.5.7 High altitude flight

4.5.8 Flight in rain

4.5.9 Aerobatics

4. Normal operating procedures

4.1 Introduction

Normal procedures associated with optional equipment are found in section 9.

NOTE:

Optional equipment is the installation of the Front Electric Sustainer.

This section provides check lists and amplifies procedures for conducting the daily and pre-flight inspection.

Furthermore this section includes normal operating procedures and recommended speeds.

4.2 Assembly

4.2.1 Rigging and de-rigging

Rigging

The powered sailplane can be rigged by two people if a wing stand or trestle is used under one wing tip.

Prior to rigging, all pins and their corresponding bearings on fuselage, wing panels and tailplane should be cleaned and greased.
Prepare main wing pin in cockpit.

Inboard wing panels

Unlock airbrake lever in the cockpit and pull it back until a hole in the tube guiding the airbrake operating tube becomes visible, then insert into it the pin used to rig the outboard panels or the round-headed tailplane rigging tool.
Set water ballast control knob at “closed”.

Insert the port wing panel first. It is important that the helper on the wing tip should concentrate on lifting the trailing edge of the wing panel more than the leading edge, so that the rear wing attachment pin does not force the inner race of the swivel bearing on the fuselage down and out of alignment.

Check that the spar stub tip is located correctly in the cut-out on the far side of the fuselage (if necessary, tilt the fuselage or move the wing gently up and down to help it home).
Check that the angular levers on the wing root rib are properly inserted into their corresponding funnels on the fuselage.

Push in the main wing pin for approx. 3 cm (1.2 in.) so that the wing panel is prevented from sliding out by the GFRP-cover of the front wing suspension tube.
The panel tip can now be placed on a wing stand.
Check again that the airbrakes are still unlocked.

Next insert the starboard panel – the procedure is the same as for the port wing panel. As soon as the pin on the starboard spar tube has engaged in its corresponding bearing on the opposing wing panel (recognized by a sudden extension of the unlocked airbrakes), the starboard panel can be pushed fully home under some pressure.

Finally push main wing pin fully home and secure its handle (depress locking pin and let it engage in the metal fitting on the fuselage skin).

Outboard wing panels (15 m (49.21 ft) or 18 m (59.06 ft) span)

Take round-headed rigging tool, screw it into wing pin locking lever (on outboard panel) and swing the latter upwards, thus extracting the pin from the spar stub tunnel.
Thereafter slide outboard panel onto spar stub of inboard panel until stub pin has just engaged in its corresponding bushing on the outboard panel, align aileron coupling lap with slot on adjacent aileron (on inbd. wing) and push panel fully home. Finally swing wing pin locking lever down (its upper edge must not protrude above wing surface) and remove rigging tool.

Horizontal tailplane

Take the round-headed rigging tool (to be stored in the side pocket) and screw it into the front tailplane locating pin on the leading edge of the fin.

Next slide the horizontal tailplane aft onto the two elevator actuating pins, pull rigging tool and its pin forwards, seat stabilizer nose and push locating pin home into the front tailplane attachment fitting.
Remove rigging tool - the locating pin must not protrude in front of the leading edge of the fin.

Check whether the elevator actuating pins are really located by moving the elevator.

After rigging

Check the controls – with the aid of a helper – for full and free movements in the correct sense.

Use tape to seal off the wing/fuselage joint, the joint between inboard and outboard wing panels, the opening for the front tailplane attachment pin and also the joint between fin and horizontal stabilizer (only necessary if there is no rubber seal at the top of the fin).

WARNING:

Do not seal the gap between both ailerons.

Sealing with tape is beneficial in terms of performance and it also serves to reduce the noise level.

De-rigging

Remove sealing tape from wing panels and tailplane.

Outboard wing panels

Swing up locking lever with the aid of the threaded rigging pin and carefully pull off outboard panel(s).

Horizontal-tailplane

Using the rigging pin, pull out front tailplane attachment pin, lift stabilizer leading edge slightly and pull tailplane forwards and off.

Inboard wing panels

Unlock airbrakes, set water dump valve control knob to the “closed” position and unlock handle of main wing pin.

With a helper at the tip of each inboard panel pull out main wing pin up to the last 20 to 30 mm (0.8 to 1.2 in.) and withdraw the starboard panel by gently rocking it backwards and forwards if necessary.

Thereafter remove main wing pin and withdraw the port panel.

4.2.2 Installing and removing engine batteries

Installing the batteries:

Refer to FES BATTERY PACK GEN2 manual section 4 (page 14) resp. Flight Manual page 9.2

CAUTION:

Both battery packs should preferably fully charged!

1. Open battery compartment cover
2. Check: Power switch OFF
3. Check: Sailplane main switch (fuse) OFF
4. Insert first pack (terminals facing forward) and slide it back to rear position
5. Insert second pack (terminals facing rearward)
6. Place pair of fixation plates in the middle of rear pack above carrying strap and tighten fixation knob
7. Secure forward battery in the same way
8. Lift power cables from side support
9. Plug in shorter cable (black housing) to minus marked 8 mm socket of front battery pack
10. Plug in longer cable (red housing) to plus marked 10 mm socket of rear battery pack
11. Insert DATA cable connectors to each battery pack DATA connector

CAUTION:

Prior to insert DATA cable connector make sure that the orientation is correct. Connector should be plugged in straight direction, otherwise pins could be damaged.

12. Turn ON „BMS switch“ on each battery pack and wait until initial check is completed.
13. Close battery compartment cover.

CAUTION:

Insert red connecting cable between front and rear pack only prior the launch.

Removing the batteries:

Refer to FES BATTERY PACK GEN2 manual section 4 (page 14) resp. Flight Manual page 9.2

CAUTION:

After every flight day the batteries should be removed independently of their use.

1. Check: Power switch OFF
2. Check: Sailplane main switch (fuse) OFF
3. Open battery compartment cover
4. Remove red connecting cable between front and rear pack
5. Remove red and black power plugs from battery packs
6. Fix both power cables on right side of battery compartment wall
7. Remove DATA connectors from each battery packs
8. Fix DATA cable to side of battery compartment
9. Unscrew both battery pack fixation knobs
10. Take all fixation plates out
11. Firmly grip the front battery pack by the carrier strap
12. Lift the battery pack out of the fuselage and put it on a safe place
13. Firmly grip the rear battery pack by the carrier strap und slide it forward along the bottom of the compartment
14. Lift the battery pack out of the fuselage and put it on a safe place
15. Close battery compartment cover

4.3 INSPECTION

a) Daily inspection

The importance of inspecting the aircraft after rigging and before commencing the day's flying cannot be over-emphasized, as accidents often occur when these daily inspections are neglected or carried out carelessly.

If the Discus-2cFES is parked a longer time after a flight prior the next start the daily inspection should be carried out.

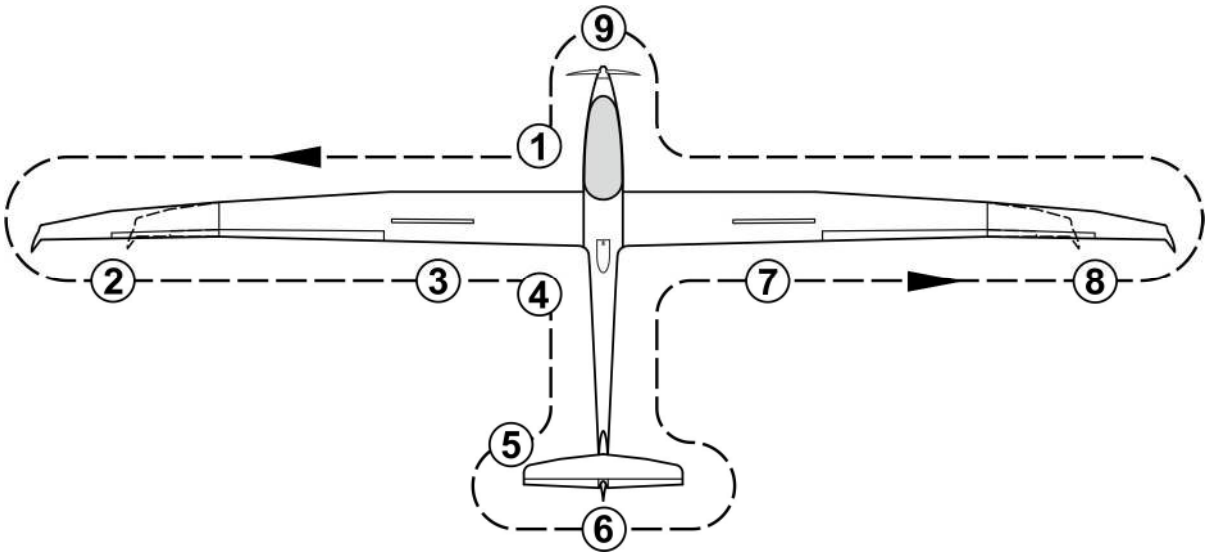

When walking around the aircraft, check all surfaces for paint cracks, dents and unevenness.

In case of doubt, ask an expert for his advice.

(1) a) Open the canopy and check gas strut raising the instrument panel for proper function

b) Check that the main wing pin is properly secured

c) Make a visual check of all accessible control circuits in the cockpit

d) Check for full and free movements of the control elements

e) Check power source(s) for firm attachment

f) Check for the presence of foreign objects

g) Check main wheel tire pressure:

4.0 bar / 58 psi (see placard)

h) Check tow release mechanism(s) for proper condition and function

(2) a) Check upper and lower wing surfaces for damage

b) Clean and grease water dump valves (if necessary)

c) Check outboard wing panels for proper connection (locking lever must be below upper wing surface)

d) Check that the ailerons are in good condition and operate freely. Check for any unusual play by gently shaking the trailing edge. Check hinges for damage

(3) a) Check ailerons on inbd. wing panels for proper condition and free movement. Check for any unusual play by gently shaking the trailing edge. Check hinges for damage

b) Check airbrakes for proper condition, fit and locking

(4) a) Check fuselage for damage, especially on its lower side

b) Check that the STATIC pressure ports for the ASI on the tail boom (0.8 m /2.62 ft forward of the base of the fin) and below the spar stub cut-out are clear

c) 1. Visual inspection of the engine battery compartment and the cover
2. Visual inspection of the correct installation of the engine batteries (if installed)

(5) a) Check condition of tail skid or wheel. If the latter is installed, check tire pressure:

2.5 bar / 36 psi (see placard)

b) Check the tripletube at the vertical fin:

1. Check that the fin-mounted PITOT tube is clear. When blowing gently into this probe, the ASI must register
2. Check the total energy compensation probe (when blowing gently from the front to the probe, the variometer(s) connected should read “climb”)
3. Check that the static holes at the pitot tube is clear (when sucking at the holes the instrument(s) connected should “indicate”)

If a water ballast fin tank is installed: (option)

c) Check that the fin tank spill holes are clear

d) Check water ballast level in fin tank (in case of doubt, discharge ballast)

e) Check that the dump hole for the fin tank in the tail wheel fairing (if installed) is clear

(6) a) Check horizontal tailplane for proper attachment and locking

b) Check elevator and rudder for free movement

c) Check trailing edge of elevator and rudder for damage

d) Check elevator and rudder for any unusual play by gently shaking the tailing edge

(7) See (3)

(8) See (2)

(9) a) Check the aero tow release in the front part of the fuselage for damage.

b) Check the propeller (if installed) and spinner for damage see FES DIS P1 102 Propeller manual section 7 and see also page 9.2 of the Flight Manual.

4.3 b) Inspection after heavy landings or excessive g-loads

After heavy landings or after the aircraft has been subjected to excessive loads, the resonant wing vibration frequency should be checked (its value to be extracted from the last inspection report for this serial number).

Check the entire aircraft thoroughly for surface cracks and other damage. For this purpose it should be de-rigged.

If damage is discovered (e.g. surface cracks in the fuselage tail boom or tailplane, or if delamination is found at the wing roots or at the bearings in the root ribs), then the aircraft must be grounded until the damage has been repaired by a qualified person.

This inspection must also include a thorough check of the power plant.

4.4 Pre-flight inspection

CHECK LIST BEFORE TAKE-OFF

- Water ballast in fin tank correctly filled (if installed)? Dump all water ballast in case of doubt!
- Loading chart checked?
- Motor batteries correctly installed (if installed)?
- Motor batteries correctly connected? Connecting cable installed (if motor batteries are intended to use)?
- Battery box cover installed?
- Propeller covers removed (if propeller is installed)?
- Parachute securely fastened?
- Safety harness secured and tight?
- Seat back and pedals in comfortable position?
- All controls and instruments easily accessible?
- Airbrakes checked and locked?
- All control surfaces checked with assistant for full and free movement in correct sense?
- Trim correctly set?
- Canopy closed and locked?

4.5 Normal operating procedures and recommended speeds

4.5.1 Methods of launching

Aerotow

(Only permissible with tow release in front part of the fuselage nose in place and engine stopped)

Maximum permitted towing speed:

V_T = 170 km/h (92 kt, 106 mph)

For aerotow only the tow release in front part of the fuselage nose must be used – hemp and nylon ropes of between 30 and 50 m length (98 - 164 ft) were tested.

Prior to take-off set elevator trim as follows:

Rearward c/g positions:	Lever to the forward of its travel
Other c/g positions:	Lever forward to first third of its travel

NOTE:

When engaging the tow rope the power switch must be OFF.

As the tow rope tightens, apply the wheel brake gently (by actuating the stick mounted lever) to prevent the aircraft from overrunning the rope.

In crosswind conditions the aileron control should be held towards the down-wind wing, i.e. in winds from the left the stick should be displaced to the right. This is to counteract the lift increase on the right wing generated by tug's prop wake, which the crosswind forces to drift to the right.

For intermediate to forward c/g positions the elevator should be neutral for the ground run; in the case of rearward c/g position it is recommended that down elevator is applied until the tail lifts.

After lift-off the elevator trim can be set for a minimum in control stick loads.

Normal towing speed is in the range of 110 to 140 km/h (59-76 kt, 68-87 mph) and 130 to 150 km/h (70-81 kt, 81-93 mph) with water ballast.

Only small control surface deflections are necessary to keep station behind the tug.

In gusty conditions or when flying into the propeller slip stream of a powerful tug, correspondingly greater control stick movements are required.

The undercarriage may be retracted during the tow; this is not, however, recommended at low altitude, as changing hands on the stick could easily cause the aircraft to lose station behind the tug.

When releasing the tow rope, pull the yellow T-shaped handle fully several times and turn only when definitely clear of the rope.

CAUTION:

If during ground roll the propeller thrust of the tug may raise grass, dust or foreign particle, the ventilation opening in the spinner should be closed.
Then any material is prevented to enter inside the spinner and cannot be sucked up from the starting engine.
In free air the ventilation should be opened.

Winch launch

(only permissible with c/g tow release in place and engine stopped)

Maximum permitted towing speed:

V_W = 150 km/h (81 kt, 93 mph)

For winch launching only the c/g tow release must be used.

Prior to take-off set elevator trim as follows.

Rearward c/g positions:	Lever forward
Forward c/g positions:	Lever in the middle
Intermediate c/g positions:	Lever in the middle of its travel

NOTE:

When engaging the tow rope the power switch must be OFF.

As the cable tightens, apply the wheel brake gently (by actuating the stick-mounted lever) to prevent the aircraft from overrunning the winch cable.

Ground run and lift-off are normal – there is no tendency to veer-off or to climb excessively steeply on leaving the ground. Depending on the load on the seat, the aircraft is lifted off with the control stick slightly pushed forward in the case of aft c/g positions and slightly pulled back with the c/g in a forward position.

After climbing to a safe height, the transition into a typical steep winch launch attitude is effected by pulling the control stick slightly further back.

At normal all-up masses, i.e. without water ballast, the launch speed should not be less than 90 km/h (49 kt, 56 mph), and with water ballast not less than 100 to 110 km/h (54 to 59 kt, 62 to 68 mph).

Normal launch speed is about 100 to 110 km/h (54 to 59 kt, 62 to 68 mph), with water ballast about 110 to 130 km/h (59 to 70 kt, 68 to 81 mph).

At the top of the launch the cable will normally back-release automatically; the cable release handle should, nevertheless, be pulled firmly several times to ensure that the cable has actually gone.

CAUTION:

Winch launching at the maximum permitted all-up weight (mass) of 525 kg (1157 lb) respective 565 kg (1246 lb) should only be done if there is an appropriately powerful winch and a cable in perfect condition available.

Furthermore there is not much point in launching by winch for a soaring flight, if the release height gained is less than 300 m (984 ft) (when the power plant is not ready for operation).

In case of doubt, reduce all-up mass (by dumping water ballast).
Winch launching with high ballast loads is not recommended if the head wind is less than 20 km/h (11 kt).

WARNING:

It is explicitly advised against winch launching with a tail wind!

CAUTION:

Prior to launching by winch, it must be ensured that the pilot is properly seated and able to reach all control elements.
Particularly when using seat cushions it must be made sure that during the initial acceleration and while in the steep climbing attitude he does not slide backwards and up.

4.5.2 Take-off and climb

The Discus-2cFES is a powered sailplane not capable of self-launching, which – like a glider – must either be launched by winch or aerotow (with its engine stopped – see section 4.5.1).

WARNING:

Do not attempt to take-off on own power!

4.5.3 Flight / Cross country flight

a) Engine stopped

The aircraft has pleasant flight characteristics and can be flown effortlessly at all speeds, loading conditions (with or without water ballast), configurations and c/g positions.

With a mid-point c/g position, the maximum speed range covered by the elevator trim is from about 75 km/h (40 kt, 47 mph) to about 180 km/h (97 kt, 112 mph).

Flying characteristics are pleasant and the controls are well harmonized. Turn reversal from + 45° to – 45° is effected without any noticeable skidding. Ailerons and rudder may be used to the limits of their travel.

Span	(m) (ft)	15 49.21	18 59.06	15 49.21	18 59.06
All-up weight (mass)	(kg) (lb)	380 838	359 790	525 1157	565 1246
Speed	(km/h) (kt) (mph)	99 53 62	95 51 59	120 65 75	119 64 74
Reversal time	(sec.)	3.0	3.2	2.5	3.2

NOTE:

Flights in conditions conductive to lightning strikes must be avoided.

High speed flying
(engine stopped)

At high speeds up to V_{NE} = 280 km/h (151 kt, 174 mph) the aircraft is easily controllable.

Full deflections of control surfaces may only be applied up to V_A = 190 km/h (103 kt, 118 mph).

At V_{NE} = 280 km/h (151 kt, 174 mph) only 1/3 of the full deflection range is permissible. Avoid especially sudden elevator control movements.

In strong turbulence, i.e. in wave rotors, thunderclouds, visible whirlwinds or when crossing mountain ridges, the speed in rough air V_{RA} = 190 km/h (103 kt, 118 mph) must not be exceeded.

With the c/g at an aft position, the control stick movement from the point of stall to maximum permissible speed is relatively small, though the change in speed will be noticed through a perceptible change in control stick loads.

The airbrakes may be extended up to V_{NE} = 280 km/h (151 kt, 174 mph). However, they should only be used at such high speeds in emergency or if the maximum permitted speeds are being exceeded inadvertently. When extending the airbrakes suddenly, the deceleration forces are noticeable.

WARNING:

Consequently it is wise to check in advance that the harness is tight and that the control stick is not inadvertently thrown forwards when the airbrakes are extended. There should be no loose objects in the cockpit. At speeds above 190 km/h (103 kt, 118 mph) extend the airbrakes only gradually (allow 2 seconds).

WARNING:

It should strictly be noted that in a dive with the airbrakes extended, it is not possible to intercept more strongly (maximum 3.5 g) than with retracted brakes (5.3 g), see section 2.9 “Maneuvering Load Factors”. Therefore pay attention when intercept with airbrakes extended at higher speeds!

A dive at 280 km/h (151 kt, 174 mph) with the airbrakes fully extended is limited to an angle to the horizon of:

all-up weight (mass)		angle to the horizon	
18 m (59.06 ft)	15 m (49.21 ft)	18 m (59.06 ft)	15 m (49.21 ft)
410 kg (902 lb)	455 kg (1001 lb)	45°	exceeding 45°
565 kg (1246 lb)	525 kg (1157 lb)	approx. 30°	exceeding 30°

Low speed flying and stall behaviour

(engine stopped)

In order to become familiar with the aircraft it is recommended to explore its low speed and stall characteristics at a safe height, this should be done whilst flying straight ahead and also whilst in a approx. 30° to 45° banked turn.

Wings level stall

A stall warning usually occurs about 5 km/h (3 kt, 3 mph) above stalling speed and begins with vibration in the controls. If the stick is pulled further back, this effect becomes more pronounced, the ailerons get spongy and the aircraft sometimes tends to slight pitching motions (speed increases again and will then drop to stalling speed).

On reaching a stalled condition – depending on the c/g position – a distinct drop of the ASI reading is observed, which then often oscillates because of turbulent air influencing the fin-mounted Pitot tube. With the c/g in rearward positions, the aircraft may slowly drop a wing, but usually it can be held level.

A normal flight attitude is regained by releasing the control stick firmly forward and – if necessary – applying opposite rudder and aileron.

The loss of height from the beginning of the stall until regaining a normal level flight attitude is up to 80 m (262 ft).

In the case of forward c/g position and stick fully pulled back, the aircraft just continues to fly in a mushed condition without the nose or a wing dropping.

Normal flying attitude is regained by easing the stick forward.

Turning flight stalls

When stalled during a co-ordinated 45° banked turn, the aircraft – with the control stick pulled fully back – just continues to fly in a stalled condition. There is no uncontrollable tendency to enter a spin.
The transition into a normal flight attitude is conducted by an appropriate use of the controls.

The loss of height from the beginning of the stall until regaining a normal level flight attitude is up to about 80 m (262 ft).

Influence of water ballast

Apart from higher stall speeds – caused by the higher mass in flight – water ballast in the wing tanks has no aggravating influence on the stall characteristics.

The loss of height from the beginning of the stall until regaining a normal level flight attitude is up to 80 m (262 ft).

With water ballast in the fin tank (optional), the stall characteristics are like those found for aft c/g positions.

Flight / Cross country flight (continued)

b) Engine operation

1. Starting the power plant

Also with the engine installed it must always flown that there is a suitable landing terrain within gliding range.

STARTING THE MOTOR
o FCU instrument **ON**
o Power switch **ON**
o Fuselage nose Ventilation **OPEN**
o Cockpit ventilation **OPEN**
o Left LED on FCU must be **GREEN**
o Turn throttle knob in clockwise direction
o 4 kW power for horizontal flight
o more than 4 kW power for climb

The loss of height, from the moment of starting the engine until it runs, is negligible.

2. Stopping the power plant

STOPPING THE MOTOR
o Turn throttle knob in counter-clockwise direction more than for **ZERO** power
– Wait until the automatic propeller-positioning system positions the propeller
– Then propeller blades will rest against the fuselage front part
o Power switch **OFF**

The loss of height, from the moment of starting to stop the engine until it stops, is negligible.

Power plant operation (continued)

The best rate of climb is achieved at a speed of about 95 km/h (51 kt, 59 mph) without water ballast. With higher weights up to maximum weight the best rate of climb is achieved at speeds of about 95 - 100 km/h
(51 - 54 kt, 59 - 62 mph).

Level flight for a longer range is done at 100 to 105 km/h (54 to 57 kt, 62 to 65 mph) with low power because of the limited battery capacity.

With power plant running, the maximum permitted speed V_{Pmax} is 160 km/h (86 kt, 99 mph).

Flying with running engine or with engine stopped the handling qualities are very similar (stall speeds are shown in section 5.2.2.).

Stopping the power plant (see check list on page 4.5.3.5)

To stop the power plant, reduce the speed to about 90 to 100 km/h (49 to 54 kt, 56 to 62 mph) and rotate the throttle knob in counter-clockwise direction more than for zero power.
After the propeller has stopped the automatic propeller positioning system will rotate the propeller in horizontal position with the propeller blades parallel to the fuselage nose.

Range
As shown by the figures in section flight performance, the longest range results from the level flight.

The following method is recommended to achieve a long range:

- Climb to the requested height with 95 km/h (51 kt, 59 mph) without water ballast following level flight with approx. 100 to 105 km/h (54 to 57 kt, 62 to 65 mph).

The range is considerably reduced after a climb until low battery voltage and a following glide until the gained height is dissipated (range data see section 5.3.2).

Low speed flight and stall behaviour

(engine running)

Compared with the stall behaviour in “clean” configuration (engine stopped), there are only small differences when aircraft stalls from level or from turning flight.

When stalling with running engine the noise of the propeller and the engine vibration increases considerably.

4.5.4 Approach

a) Engine stopped

Normal approach speed with airbrakes fully extended and wheel down is 105 km/h (56 kt, 65 mph) (without water ballast and low payload in the fuselage) or 115 km/h (62 kt, 71 mph) (at maximum permitted all-up weight (mass) with water ballast).
The yellow triangle on the ASI at the 110 km/h (59 kt, 68 mph) marks the recommended approach speed for the maximum weight (mass) without water ballast.
In the above configurations the L/D is approximately 6.6 : 1.
The airbrakes open smoothly and are an effective landing aid.
Side slipping is also fine for landing. It is possible in a straight line with the rudder deflected up to about 70 % (air brakes retracted) of its travel respective 40 % (air brakes extended) and results in a yaw angle of about 30° and a bank angle of about 10° to 20°.
The control force reversal is low, so only a gentle amount of opposite pedal pressure is required to keep the rudder displaced.
To return to level flight, normal opposite controls are required.

CAUTION:

With rudder fully deflected, side slips in a straight flight path are not possible.
The Discus-2cFES will slowly turn in the direction of the displaced rudder.
Side slipping causes the ASI to read less.

WARNING:

Both the performance and the aerodynamic characteristics of the Discus-2cFES are affected adversely by heavy rain or ice on the wing.
Be caution when landing!
Increase the approach speed at least 5 to 10 km/h (3 to 5 kt, 3 to 6 mph).

b) Propeller rotating
(only permitted with power switch OFF and in an emergency case)

With propeller rotating (power switch OFF), the Discus-2cFES can be landed in the same manner as in “clean” configuration (engine stopped).

The approach speeds are unchanged.
Flight performance is nearly unchanged.

4.5.5 Landing

a) Engine stopped
For off-field landings the undercarriage should always be extended, as the protection of the pilot is much better, especially from vertical impacts on landing.

Main wheel and tail wheel should touch down simultaneously.

To avoid a long ground run, make sure that the aircraft touches down at minimum speed.
A touch-down at a speed of 100 km/h (54 kt, 62 mph) instead of 90 km/h (49 kt, 56 mph) means that the kinetic energy to be dissipated by braking is increased by a factor of 1.23 and therefore the ground run is lengthened considerably.

By applying the wheel brake the ground run may be shortened significantly.

b) Propeller rotating
(Power switch OFF)

Landings with rotating propeller are permitted only in an emergency case.

WARNING:

Caution when touching down and applying the wheel brake. The effectiveness of the wheel brake or rough surface should not result in a nose-down of the Discus-2cFES because of the rotating propeller.

4.5.6 Flight with water ballast

To reach the maximum permitted all-up mass water ballast is required.

Wing ballast tanks

The water tanks are integral compartments in the nose section of the main wing panels.

These tanks are to be filled, through round openings in the upper wing surface featuring a strainer. Always fill the tanks with clear water.

Tank openings are closed with plugged-in filler caps having a 6 mm (0.24 in.) female thread for lifting and venting. Lifting these caps is done with the aid of the tailplane rigging pin.

WARNING:

As the threaded hole in the filler cap also serves for venting the tank, it **must** always be kept open!

Each wing tank has a capacity of 100 liter (26.42 US Gal., 22.00 IMP Gal.)

Dumping the ballast from full tanks takes about 3.5 minutes.

After 30 seconds:	90 liter
After 60 seconds:	140 liter

When filling the tanks it must be ensured that the maximum permitted all-up mass is not exceeded – see page 6.2.5.

The tank on either side must always be filled with the same amount of water to prevent lateral imbalance.

When taking off with partly full tanks, ensure that the wings are held level to allow the water to be equally distributed so that the wings are balanced.

Because of the additional mass in the wing panels, the wing tip runner should continue running for as long as possible during the launch.

Water ballast is dumped through an opening on the lower side of the main wing panels situated 0.6 m (23.62 in.) next to the root rib.

The dump valves are hooked up automatically on rigging the aircraft (with water ballast control knob to be set at “CLOSED”):

Thanks to baffles inside the ballast tanks there is no perceptible movement of the water ballast when flying with partly filled tanks.

When flying at maximum permitted all-up mass, the low speed and stall behaviour of the aircraft is slightly different from its flight characteristics without water ballast: The stall speeds are higher (see section 5.2.2) and for correcting the flight attitude larger control surface deflections are required. Furthermore more height is lost until a normal flight attitude is regained.

WARNING:

In the unlikely event of the tanks emptying unevenly or only one of them emptying (recognized by having to apply up to 50 % opposite aileron for a normal flight attitude), it is necessary to fly somewhat faster to take into account the higher mass and also to avoid stalling the aircraft.

During the landing run the heavier wing should be kept somewhat higher (if permitted by the terrain) so that it touches down only at the lowest possible speed. This reduces the danger of the aircraft to veer off course.

Water ballast fin tank (option)

For optimum performance the forward travel of the center of gravity, caused by water ballast in the wing, may be compensated by carrying water ballast in the fin tank.

The water ballast tank is an integral compartment in the fin with a capacity of 8.0 kg/liter (2.11 US Gal., 1.76 IMP Gal.). The fin tank has eight holes, all properly marked, on the right hand side of the fin, which indicate the water level. The ventilation of the tank is through the uppermost 8.0 kg/liter hole which always remains open even with full tank.

The ballast quantity to be filled depends on the water load in the wing tanks – see loading table on page 6.2.7.

The tank is filled as follows – with the horizontal tailplane in place or removed:

Before filling the tank close the holes with tape starting by the lowest and ending one less than the desired filling quantity.

Example:

If a fin ballast load of 3.0 kg/liter is required, only the lower two holes (1 and 2) are closed with tape. After filling with 3 liter of clear water any excessive water will escape through the third hole. Thus preventing any overloading.

Set elevator trim fully aft. Only necessary if tailplane is mounted.

A hose with an outer diameter of 8 mm (0.31 in), which is connected to a filling container, must be inserted into the pipe, on the top left side in the rudder gap of the fin and then the required quantity of clear water has to be filled.

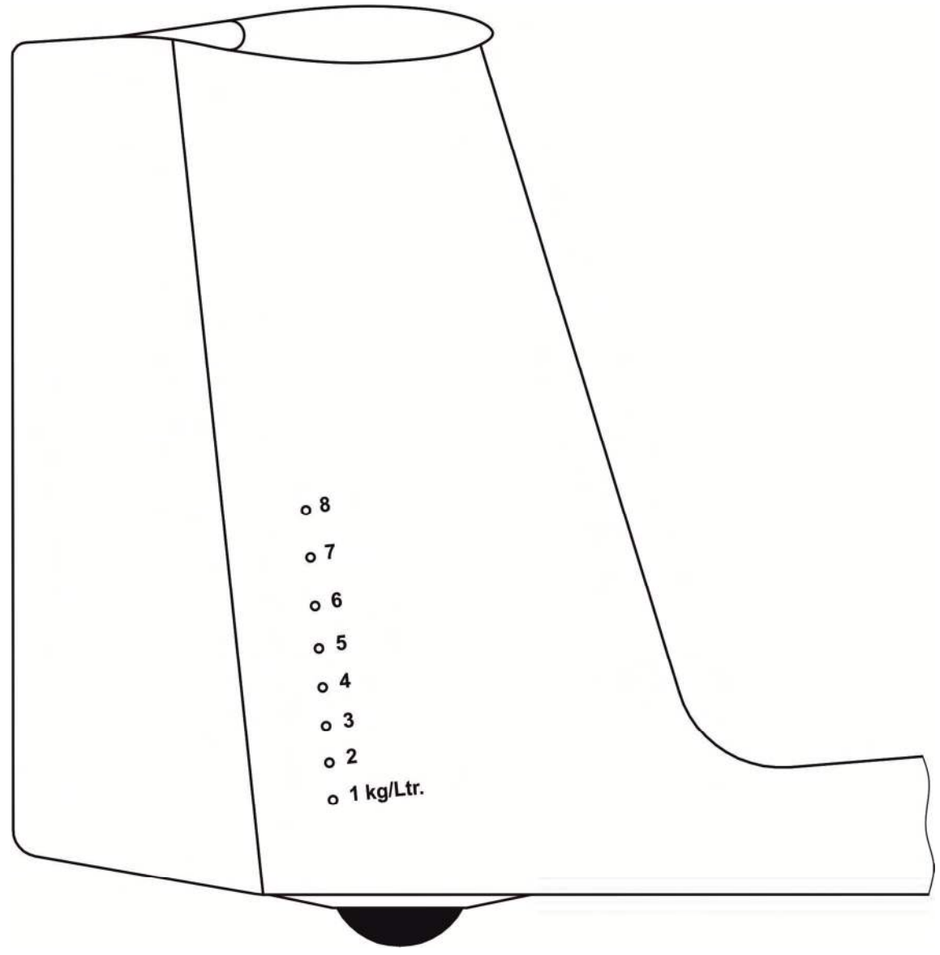

Water is dumped from the fin tank through an opening on the lower side of the fuselage tail boom – adjacent to the rudder.

The fin tank dump valve is linked to the torsional drive for the valves on the wing panels so that these three tanks are always emptying simultaneously.

The time required to dump the ballast from a full fin tank is about ninety seconds, i.e. dumping the full wing tanks always takes longer.

Continuing on page 4.5.6.5.

General

WARNING:

1. On longer flights near 0 °C (32 °F), water ballast must be dumped upon reaching an air temperature of 2 °C (36 °F), thus preventing structural damage due to frozen dump valve.

CAUTION:

2. There is little point in loading much water ballast if the average rate of climb expected does not exceed 1.0 m/s (197 fpm). The same applies to flights in narrow thermals requiring steep angles of bank.

3. If possible, all water ballast should be dumped before conducting an off-field landing.

4. Before the wing water tanks are filled, it should be checked (with dump valves unlocked) that both drain plugs open up equally. Leaking (dripping) valves are avoided by cleaning and greasing the plugs and their seats (with valves opened).
   Thereafter, with valve closed, the drain plugs are pulled home with the threaded tool used to attach the horizontal tailplane.

WARNING:

5. Never pressurize the tanks – for instance by filling them directly from a water hose – and always pour in clear water only.

6. On no account whatsoever must the aircraft ever parked with full ballast tanks if there is the danger of them freezing up.
   Even in normal temperatures the parking period with full tanks should not exceed several days.
   For parking all water ballast is to be completely drained off with filler caps removed to allow the tanks to dry out.

7. Before the fin tank is filled, check that those spill holes not being taped closed are clear.

4.5.7 High altitude flight

When flying at high altitude it should be noted that true airspeed (TAS) increases versus indicated airspeed (IAS).

This difference does not affect the structural integrity or load factors, but to avoid any risk of flutter, the following indicated values (IAS) must not be exceeded:

Altitude		V_{NE} (IAS)			Altitude		V_{NE} (IAS)		
m	ft	km/h	kt	mph	m	ft	km/h	kt	mph
0-2000	0-6562	280	151	174	7000	22966	215	116	134
3000	9843	267	144	166	8000	26247	203	110	126
4000	13123	253	137	157	9000	29528	191	103	119
5000	16404	240	130	149	10000	32808	180	97	112
6000	19685	227	122	141					

Flying at temperatures below freezing point

When flying at temperatures below 0 °C (32 °F), as in wave or during the winter months, it is possible that the usual ease and smoothness of the control circuits is reduced. It must therefore be ensured that all control elements are free from moisture so that there is no danger of them freezing solid. This applies especially to the airbrakes!

From experience gained to date it has been found beneficial to cover the mating surfaces of the airbrakes with “Vaseline” along their full length so that they cannot freeze solid. Furthermore the control surfaces should be moved frequently.

When flying with water ballast observe the instructions given in section 4.5.6.

NOTE:

At low temperatures of the engine batteries the performance of the engine batteries is reduced. Therefore – if the engine is needed – it makes sense to use only moderate engine power.

NOTE:

The polyester coating on this aircraft is known from many years experience to become very brittle at low temperature.

Particularly when flying in wave at altitudes in excess of about 6000 m (approx. 20000 ft), where temperatures of below – 30 °C (- 22 °F) may occur, the gel-coat, depending on its thickness and the stressing of the aircraft's components, is prone to cracking!

Initially, cracks will only appear in the polyester coating, however, with time and changing environment, cracks can reach the Epoxy/glass matrix.

Cracking is obviously enhanced by steep descents from high altitudes at associated very low temperatures.

WARNING:

Therefore, for the preservation of a proper surface finish free from cracking, the manufacturer strongly advises against high altitude flights with associated temperatures of clearly below – 20 °C (- 4 °F)!

A steep descent with the airbrakes extended should only be conducted in case of emergency (instead of the airbrakes the undercarriage may also be extended to increase the rate of sink).

4.5.8 Flight in rain

1. Engine stopped

When flying the aircraft with a wet surface or in rain, the size of the water drops adhering to the wing causes a deterioration of its flight performance which cannot be expressed in numerical values due to the difficulties involved with such measurements. Often the air mass containing the moisture is also descending so that – compared with a wet aircraft in calm air – the sink rates encountered are higher.

Flight tests in rain, conducted by the manufacturer, did not reveal any significant differences in the stalling behaviour or stalling speeds.

It cannot be excluded, however, that excessive alterations of the airfoil (as caused by snow, ice or heavy rain) result in higher minimum speeds.

Approach in rain: See page 4.5.4.1.

NOTE:

To prevent water penetrating in the engine open the front ventilation only so far to avoid steaming up the cockpit glass.

2. Engine running

WARNING:

Heavy rain and thunderstorms should be avoided to prevent erosion of the propeller blades and water entering in the engine.

NOTE:

To prevent water penetrating in the engine open the front ventilation only so far to avoid steaming up the cockpit glass and overheating the engine.

4.5.9 Aerobatics

Only permissible **without water ballast, without engine batteries** and **without propeller blades** up to **an all-up weight (mass) of 410 kg (902 lb)** with 18 m (59.06 ft) respective 15 m (49.21 ft) wing span.

The following aerobatic manoeuvers are permitted:

(a) Inside loops

(b) Stalled turns

(c) Lazy Eight

Inside loop

Enter maneuver at a speed of about 180 km/h (97 kt, 112 mph).
Speed during recovery: about 180 km/h (97 kt, 112 mph).

Stalled turn

Enter maneuver at a speed of about 180 km/h (97 kt, 112 mph).
Whilst climbing vertically let the wing, which will be on the inside of the turn, drag and then, at about 140 km/h (76 kt, 87 mph), apply rudder in the direction of the dragging wing in order to prevent a distorted maneuver.

Lazy Eight

Enter maneuver at a speed of about 180 km/h (97 kt, 112 mph). After pulling up in a 45° climb enter a turn at about 120 km/h (65 kt, 75 mph).
Speed during recovery: about 160 km/h (86 kt, 99 mph).

Section 5

5. Performance

5.1 Introduction

5.2 Approved data

5.2.1 Airspeed indicator system calibration

5.2.2 Stall speeds

5.2.3 Take-off distances

5.2.4 Additional information

5.3 None approved additional information

5.3.1 Demonstrated crosswind performance

5.3.2 Flight polar / Climb performance / Range / Battery ageing

5.3.3 Noise data

5.1 Introduction

This section provides approved data for airspeed calibration, stall speeds and none approved additional information.

The data in the charts has been computed from actual flight tests with an aircraft in good condition and using average piloting techniques.

5.2 Approved data

5.2.1 Airspeed indicator system calibration

Errors in indicated airspeed (IAS) caused by Pitot/Static pressure errors may be read off from the calibration chart below.
This chart is applicable to free flight at a mass of 430 kg.

PITOT pressure source: Near top of fin (special multiprobe)

STATIC pressure source: Fuselage tail boom, 0.8 m (31.5 in.) forward of base of fin and 0.15 m (5.9 in.) below main spar cut-out

All airspeeds shown in this manual are indicated airspeeds (IAS) as registered by the airspeed indicator.

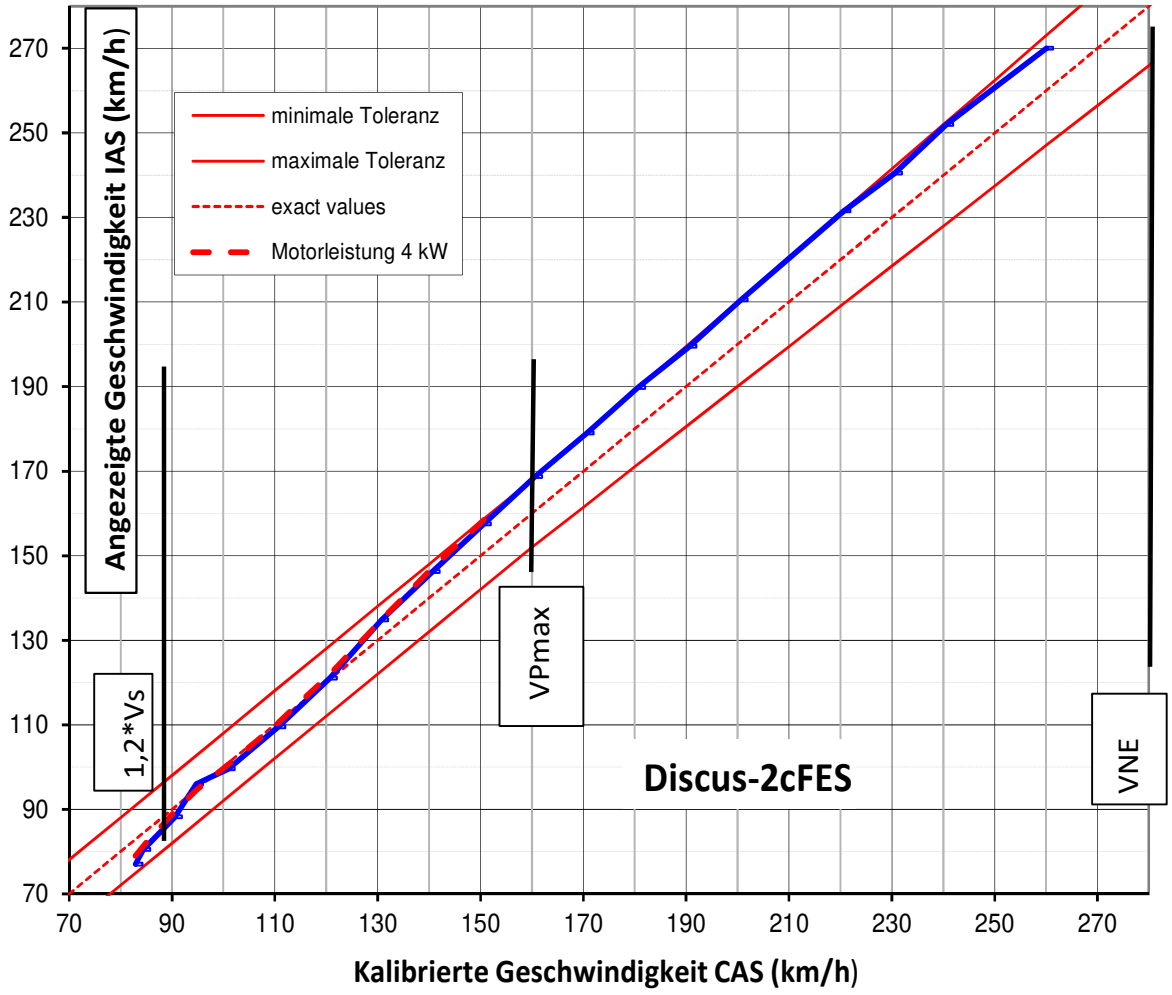

5.2.2 Stall speeds

The following stall speeds (IAS) at various flap settings were determined in straight and level flight:

Configuration		ENGINE STOPPED			
Wing span		15 m (49.21 ft)		18 m (59.06 ft)	
All-up weight (mass) (approx.)		425 kg 937 lb	525 kg 1157 lb	433 kg 955 lb	565 kg 1246 lb
C/G position (aft of datum)		420 mm 16.54 in.	280 mm 11.02 in.	420 mm 16.54 in.	280 mm 11.02 in.
Stall speed, airbrakes closed	km/h kt mph	61* 33* 38*	70* 38* 44*	61* 33* 38*	75* 40* 47*
airbrakes extended	km/h kt mph	67* 36* 42*	74* 40* 46*	64* 35* 40*	80* 43* 50*

* At minimum speed the reading of the ASI is heavily oscillating because of turbulent air influencing the pitot tube above the fin.

Configuration		ENGINE RUNNING			
Wing span		15 m (49.21 ft)		18 m (59.06 ft)	
All-up weight (mass) (approx.)		425 kg 937 lb	525 kg 1157 lb	433 kg 955 lb	565 kg 1246 lb
C/G position (aft of datum)		420 mm 16.54 in.	280 mm 11.02 in.	420 mm 16.54 in.	280 mm 11.02 in.
Stall speed, airbrakes closed	km/h kt mph	70* - 75* 38* – 40* 44* - 47*	85 46 53	62* - 70* 34* - 38* 39* - 44*	69* - 77* 37* - 42* 43* - 48*

The loss of height from the beginning of the stall until regaining a normal level flight attitude is up to 80 m (261 ft).

5.2.3 Take-off distances

Taking-off on own power is **not** permissible – the Discus-2cFES is only capable of self-sustaining.

5.2.4 Additional information

None.

5.3 None approved additional information

5.3.1 Demonstrated crosswind performance

The maximum crosswind velocity, at which take-offs and landing have been demonstrated, is

20 km/h (11 kt, 12 mph).

5.3.2 Flight polar / Climb performance / Range / Battery ageing

All values shown below refer to MSL 0 ft (0 m) and 15 °C (59 °F).

Engine stopped

Span	(m) (ft)	15 49.21	15 49.21	18 59.06	18 59.06
All-up weight (mass)	(kg) (lb)	395 869	525 1157	405 891	565 1246
Wing loading	(kg/m²) (lb/ft²)	38.9 8.0	51.7 10.6	35.6 7.3	approx. 50 10.2
Minimum rate of sink	(m/s) (fpm)	0.64 126	0.74 146	0.57 112	0.64 126
at a speed of	(km/h) (kt) (mph	91 45 52	100 54 62	87 47 54	97 52 60
Best L/D at speed of approx.	(km/h) (kt) (mph)	108 54 62	120 65 75	100 54 62	125 67 78

NOTE:

Performance data are calculated from the speed polar diagram on page 5.3.2.2 respective page 5.3.2.3 taken the additional sink rate in account.

Speed polar for 18 m (59.06 ft) span

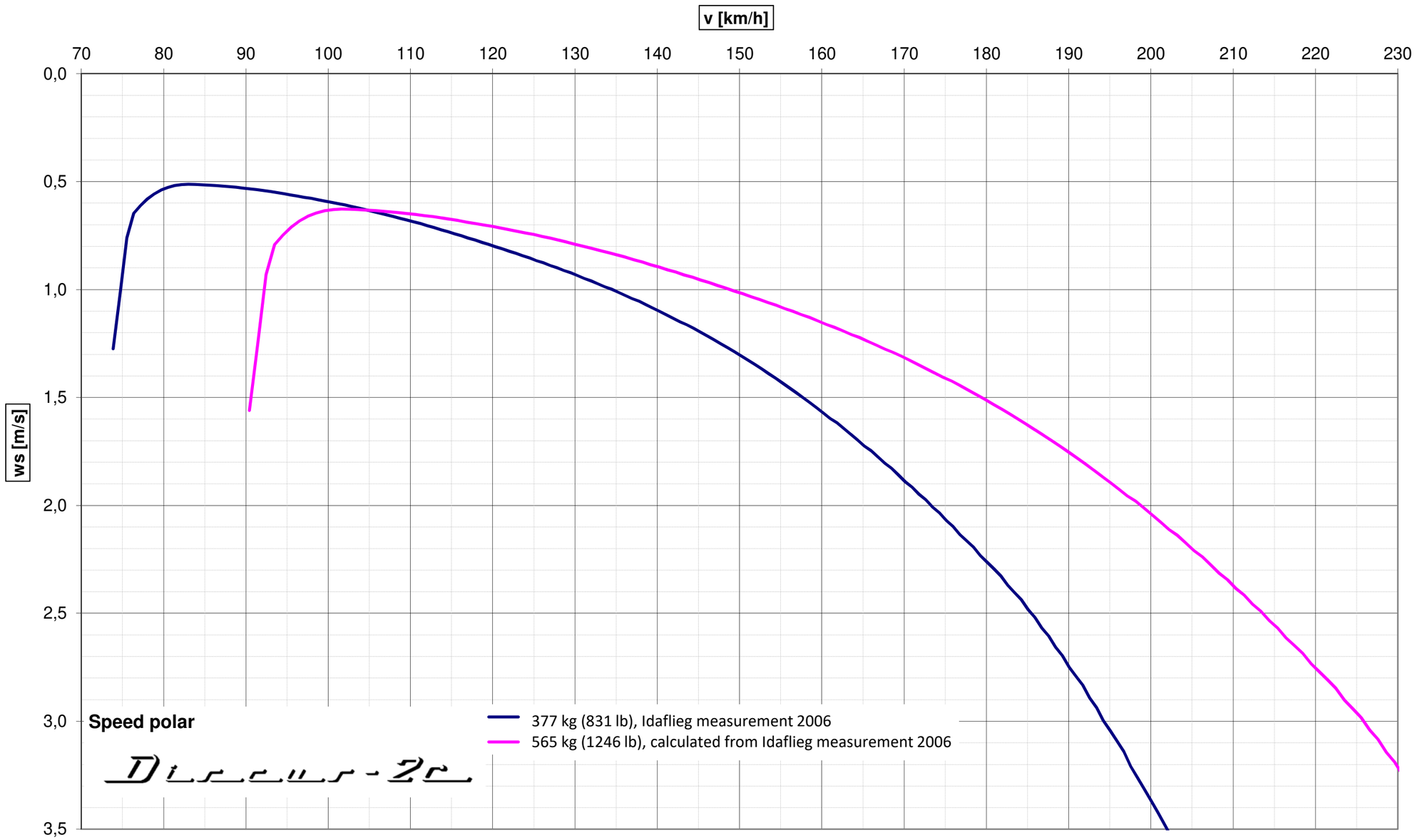

Speed polar for 15 m (49.21ft) span
DLR/Idaflieg measurement August 13, 2003, mass 348 kg (767 lb)

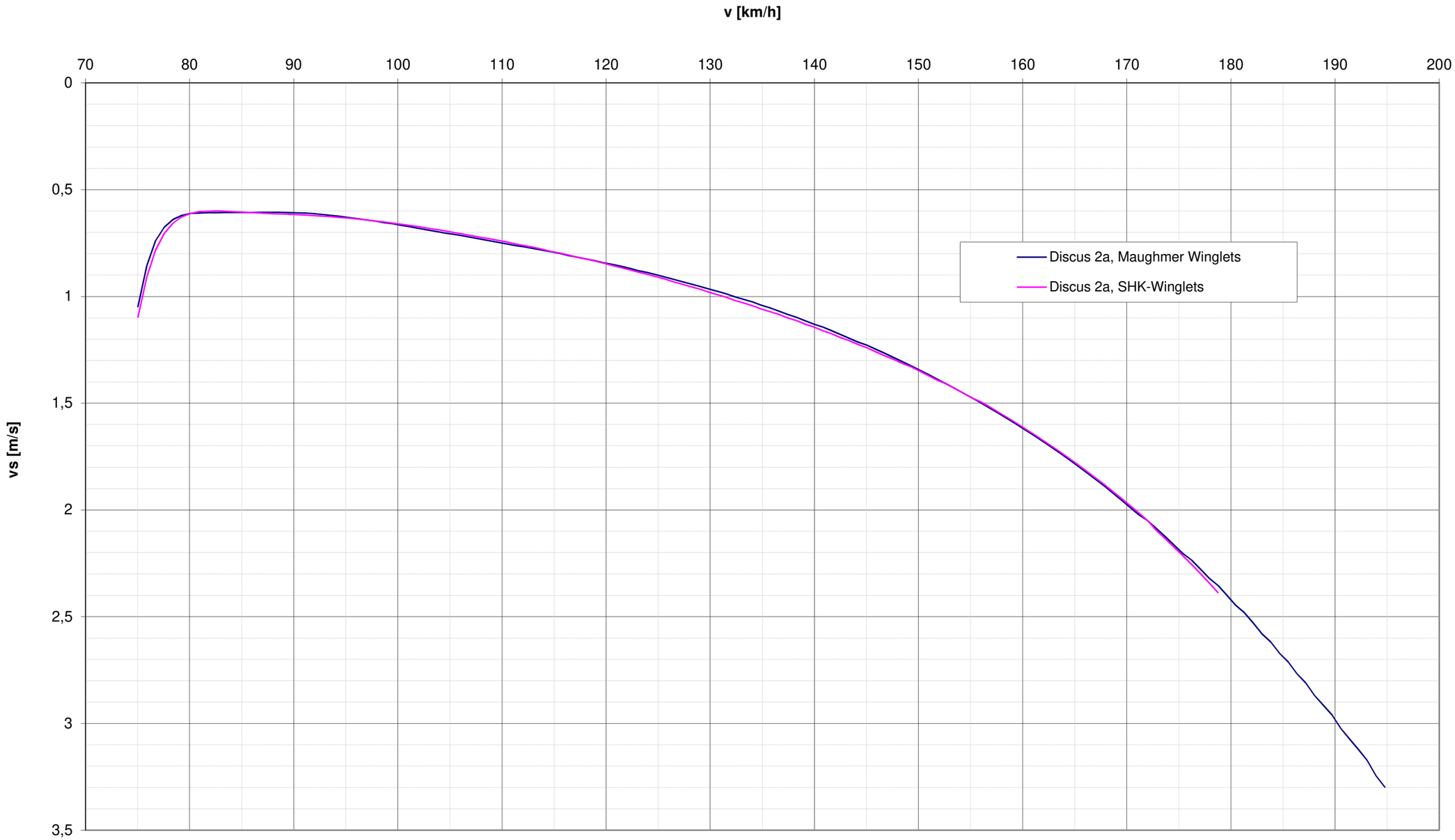

Climb performance

Recommended climb performance without water ballast V_Y = 90 km/h (49 kt, 56 mph).
Recommended climb performance with maximum weight V_Y = 95 to 100 km/h (51 to 53 kt, 59 to 62 mph).

Range (without water ballast)

Usable battery voltage: from 116 V down to 95 V

Because of the limited battery capacity two examples are given for maximum range in calm air.

1. Climb with maximum power for 3 minutes following a cruise flight with 4 kW power at a cruising speed of approx. 105 km/h (57 kt, 65 mph). Glide to the height at the beginning of the climb with best glide ratio.

   Range 18 m (59.06 ft): approx. 94 km (51 nm)

2. Only cruise flight with 4 kW power and approx. 105 km/h (57 kt, 65 mph)

   Endurance: approx. 1 hour
   Range 18 m (59.06 ft): approx. 105 km (57 nm)

CAUTION:

With 15 m (49.21 ft) wing span the range is moderately reduced.

Battery ageing:
The data for the climb und range are valid for a sailplane in good condition and new engine batteries.
Because of the ageing of the batteries the performance data will slowly diminish.
For more information refer to FES BATTERY PACK GEN 2 manual, section 6 and page 9.2 of the Flight Manual.

Climb

1. During a longer climb the charging condition of the batteries alter considerably. Because the maximum climb speed depends from the battery charge condition the maximum possible climb speed is significantly reduced during a longer climb.
   Because the maximum climb speed depends only marginal from the climb altitude it is not possible to specify a reasonable climb altitude.

2. The table below is valid for a climb with full charged new batteries and a Discus-2cFES in good condition. The climb is stopped at the battery low voltage limit of 95 V. Deviation from these conditions result in lower climb height.

3. The figures are valid for 18 m (59.06 ft) span.
   With 15 m (49.21 ft) span the climb rates are moderately reduced.

Span	18 m (59.06 ft)
Mass	430 kg (948 lb)
Climb height	approx. 800 m (2625 ft)

5.3.3 Noise data

The powered sailplane produces only through the propeller a certain noise level which is by far lower than the noise of the Discus-2cT with combustion engine.

Section 6

6. Weight (mass) and balance

6.1 Introduction

6.2 Weight (mass) and balance record and permitted payload range

Determination of: Water ballast in wing tanks
Water ballast in fin tank

6.1 Introduction

This section contains the payload range within which this powered sailplane may be safely operated.

Procedures for weighing the aircraft and the calculation method for establishing the permitted payload range and a comprehensive list of all equipment available are contained in the Discus-2cFES Maintenance Manual.

The equipment actually installed during the last weighing of the aircraft is shown in the “Equipment List” to which page 6.2.3 respectively 6.2.4 refers to.

6.2 Weight and balance record / Permitted seat load range

The following loading chart (page 6.2.3 respectively 6.2.4) shows the maximum and minimum load on the seat.

The configuration with installed or removed propeller and/or engine batteries is entered in the loading chart.

These charts are established with the aid of the last valid weighing report – the required data and diagrams are found in the Discus-2cFES Maintenance Manual.

The loading charts (weight & balance log sheets) are only applicable for this particular powered sailplane, with the serial number which is shown on the title page.

A seat load of less than the required minimum is to be compensated by ballast. For further information refer to page 6.2.2.

Altering the minimum seat load by trim ballast weights

A trim ballast mounting provision is provided on the housing of the aero tow.

Trim ballast weights (option)

The ballast mounting provision holds up to three lead plates with a weight of 3.5 kg (7.72 lb) each and allows a reduction of the minimum seat load as shown in the following table:

Difference as compared with placarded minimum:	Number of lead plates required:
up to 5 kg (11 lb) less	1
up to 10 kg (22 lb) less	2
up to 15 kg (33 lb) less	3

Lever arm of trim ballast plates: 1085 mm (42.72 in.) ahead of datum

WEIGHT AND BALANCE LOG SHEET

(Loading chart)
for Ser.-No.:

Date of weighing					
Empty mass (kg)	18 m				
Empty mass (kg)	15 m				
Equipment list dated					
Tail battery installed? YES/NO					
Mass tail battery (kg)					
Engine batteries installed? YES/NO					
Propeller blades installed? YES/NO					
Empty mass c/g position aft of datum (mm)	18 m				
Seat load (pilot incl. parachute) (kg)	max.*)				
	min.				
Max. useful load in fuselage (kg)					
Tail tank installed? YES/NO					
Inspector: Stamp, signature, date					

CAUTION:

*) Maximum seat load (Pilot and parachute) equal maximum useful load in fuselage but not more than 110 kg (242.5 lb)

For the determination of water ballast in the wing tanks refer to page 6.2.5 respectively 6.2.6
For the determination of water ballast in the fin tank refer to page 6.2.7 and 6.2.8.

WARNING:

If the tail tank is installed the pilot must whether dump the water completely prior the launch or check precisely the amount of water in the tail tank with respect of the amount of water in the wing water ballast.

WEIGHT AND BALANCE LOG SHEET

(Loading chart)
for Ser.-No.:

Date of weighing					
Empty mass (kg)	18 m				
Empty mass (kg)	15 m				
Equipment list dated					
Tail battery installed? YES/NO					
Mass tail battery (kg)					
Engine batteries installed? YES/NO					
Propeller blades installed? YES/NO					
Empty mass c/g position aft of datum (mm)	18 m				
Seat load (pilot incl. parachute) (kg)	max.*)				
	min.				
Max. useful load in fuselage (kg)					
Tail tank installed? YES/NO					
Inspector: Stamp, signature, date					

CAUTION:

*) Maximum seat load (Pilot and parachute) equal maximum useful load in fuselage but not more than 110 kg (242.5 lb)

For the determination of water ballast in the wing tanks refer to page 6.2.5 respectively 6.2.6
For the determination of water ballast in the fin tank refer to page 6.2.7 and 6.2.8.

WARNING:

If the tail tank is installed the pilot must whether dump the water completely prior the launch or check precisely the amount of water in the tail tank with respect of the amount of water in the wing water ballast.

WING SPAN – 18 m (59.06 ft)

Water ballast load

Maximum all-up mass including water ballast: **565 kg** / **1246 lb**

C/G position of water ballast in wing tanks:
Inboard wing: 207 mm / 8.15 in (aft of datum)

Total capacity of wing tanks (both wings):
Inboard wing: 200 kg / 440 lb

Table of water ballast loads at various empty masses and seat loads:

Empty mass + fin ballast		LOAD ON THE SEAT														
		kg		lb	kg		lb	kg		lb	kg		lb	kg		lb
kg	lb	70		154	80		176	90		198	100		220	110		242
300	661	195	51.5	42.9	185	48.9	40.7	175	46.2	38.5	165	43.6	36.3	155	40.9	34.1
310	683	185	48.9	40.7	175	46.2	38.5	165	43.6	36.3	155	40.9	34.1	145	38.3	31.9
320	705	175	46.2	38.5	165	43.6	36.3	155	40.9	34.1	145	38.3	31.9	135	35.7	29.7
330	728	165	43.6	36.3	155	40.9	34.1	145	38.3	31.9	135	35.7	29.7	125	33.0	27.5
340	750	155	40.9	34.1	145	38.3	31.9	135	35.7	29.7	125	33.0	27.5	115	30.4	25.3
350	772	145	38.3	31.9	135	35.7	29.7	125	33.0	27.5	115	30.4	25.3	105	27.7	23.1
360	794	135	35.7	29.7	125	33.0	27.5	115	30.4	25.3	105	27.7	23.1	95	25.1	20.9
370	816	125	33.0	27.5	115	30.4	25.3	105	27.7	23.1	95	25.1	20.9	85	22.5	18.7
		liter	US Gal.	IMP Gal.	liter	US Gal.	IMP Gal.	liter	US Gal.	IMP Gal.	liter	US Gal.	IMP Gal.	liter	US Gal.	IMP Gal.
		WATER BALLAST IN WING TANKS														

CAUTION:

When determining the max. permitted wing water ballast load, allowance must be made for water ballast in the fin tank (see page 6.2.7 and 6.2.8), i.e. this load must be added to the empty mass shown on the above table.

Empty mass as per latest entry on page 6.2.3 resp. 6.2.4.
Water ballast in fin tank as per page 6.2.8.

WING SPAN – 15 m (49.21 ft)

Water ballast load

Maximum all-up mass including water ballast: **525 kg** / **1157 lb**

C/G position of water ballast in wing tanks:
Inboard wing: 207 mm / 8.15 in (aft of datum)

Total capacity of wing tanks (both wings):
Inboard wing: 200 kg / 440 lb

Table of water ballast loads at various empty masses and seat loads:

Empty mass + fin ballast		LOAD ON THE SEAT														
		kg		lb	kg		lb	kg		lb	kg		lb	kg		lb
kg	lb	70		154	80		176	90		198	100		220	110		242
300	661	155	40.9	34.1	145	38.3	31.9	135	35.7	29.7	125	33.0	27.5	115	30.4	25.3
310	683	145	38.3	31.9	135	35.7	29.7	125	33.0	27.5	115	30.4	25.3	105	27.7	23.1
320	705	135	35.7	29.7	125	33.0	27.5	115	30.4	25.3	105	27.7	23.1	95	25.1	20.9
330	728	125	33.0	27.5	115	30.4	25.3	105	27.7	23.1	95	25.1	20.9	85	22.5	18.7
340	750	115	30.4	25.3	105	27.7	23.1	95	25.1	20.9	85	22.5	18.7	75	19.8	16.5
350	772	105	27.7	23.1	95	25.1	20.9	85	22.5	18.7	75	19.8	16.5	65	17.2	14.3
360	794	95	25.1	20.9	85	22.5	18.7	75	19.8	16.5	65	17.2	14.3	55	14.5	12.1
370	816	85	22.5	18.7	75	19.8	16.5	65	17.2	14.3	55	14.5	12.1	45	11.9	9.9
		liter	US Gal.	IMP Gal.	liter	US Gal.	IMP Gal.	liter	US Gal.	IMP Gal.	liter	US Gal.	IMP Gal.	liter	US Gal.	IMP Gal.
		WATER BALLAST IN WING TANKS														

CAUTION:

When determining the max. permitted wing water ballast load, allowance must be made for water ballast in the fin tank (see page 6.2.7 and 6.2.8), i.e. this load must be added to the empty mass shown on the above table.

Empty mass as per latest entry on page 6.2.3 resp. 6.2.4.
Water ballast in fin tank as per page 6.2.8.

Water ballast loads in fin tank (option)

WARNING:

Water ballast in the fin tank may only be used to compensate the nose-heavy moment of water ballast carried in the wing tanks!

The determination of the ballast quantity carried in the fin tank (m_{FT}) is done with the aid of the diagram shown on page 6.2.8.

Notes concerning the use of the fin tank are given on page 4.5.6.3.

NOTE:

When determining the useful load in the fuselage the quantity of water ballast in the fin must not be taken in account because of flight mechanic reasons.

Example:

Assumed ballast load in wing tanks:	80.0 kg/liter
Permissible ballast load (fill only full liters) in fin tank according to diagram on page 6.2.8.	m_{FT} = 3.0 kg/liter

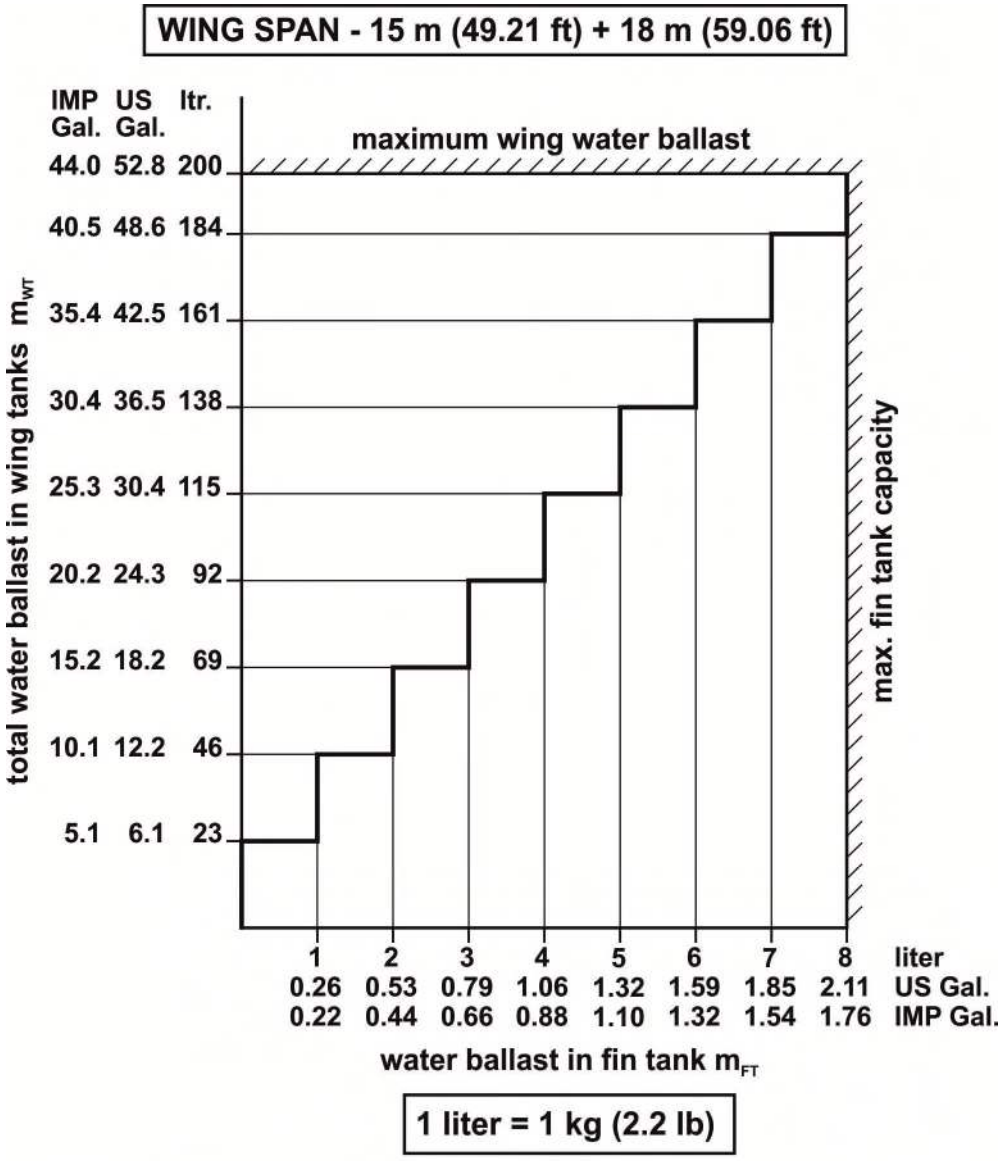

Lever arm of water ballast in fin tank:
4305 mm (169.49 in.) aft of datum
Fin tank capacity: 8 liter - 2.11 US Gal. - 1.76 IMP Gal.

NOTE:

Always full liters are to be filled. Where value jumps, either the higher or lower amount of ballast may be used.

Section 7

7. Description of the aircraft and its systems

7.1 Introduction

7.2 Cockpit-description

7.3 Instrument panel

7.4 Undercarriage

7.5 Seat and restraint system

7.6 Static pressure and Pitot pressure system

7.7 Airbrake system

7.8 Baggage compartment

7.9 Water ballast system(s)

7.10 Power plant system

7.11 Power plant battery system

7.12 Electrical system

7.13 Miscellaneous equipment
(removable ballast, oxygen, ELT etc.)

7.1 Introduction

This section provides a description of the powered sailplane including the operation of its systems.

For details concerning optional systems (FES front electric sustainer) and equipment refer to section 9 “Supplements”.

For further descriptions of components and systems refer to section 1 of the Maintenance Manual.

7.2 Cockpit description

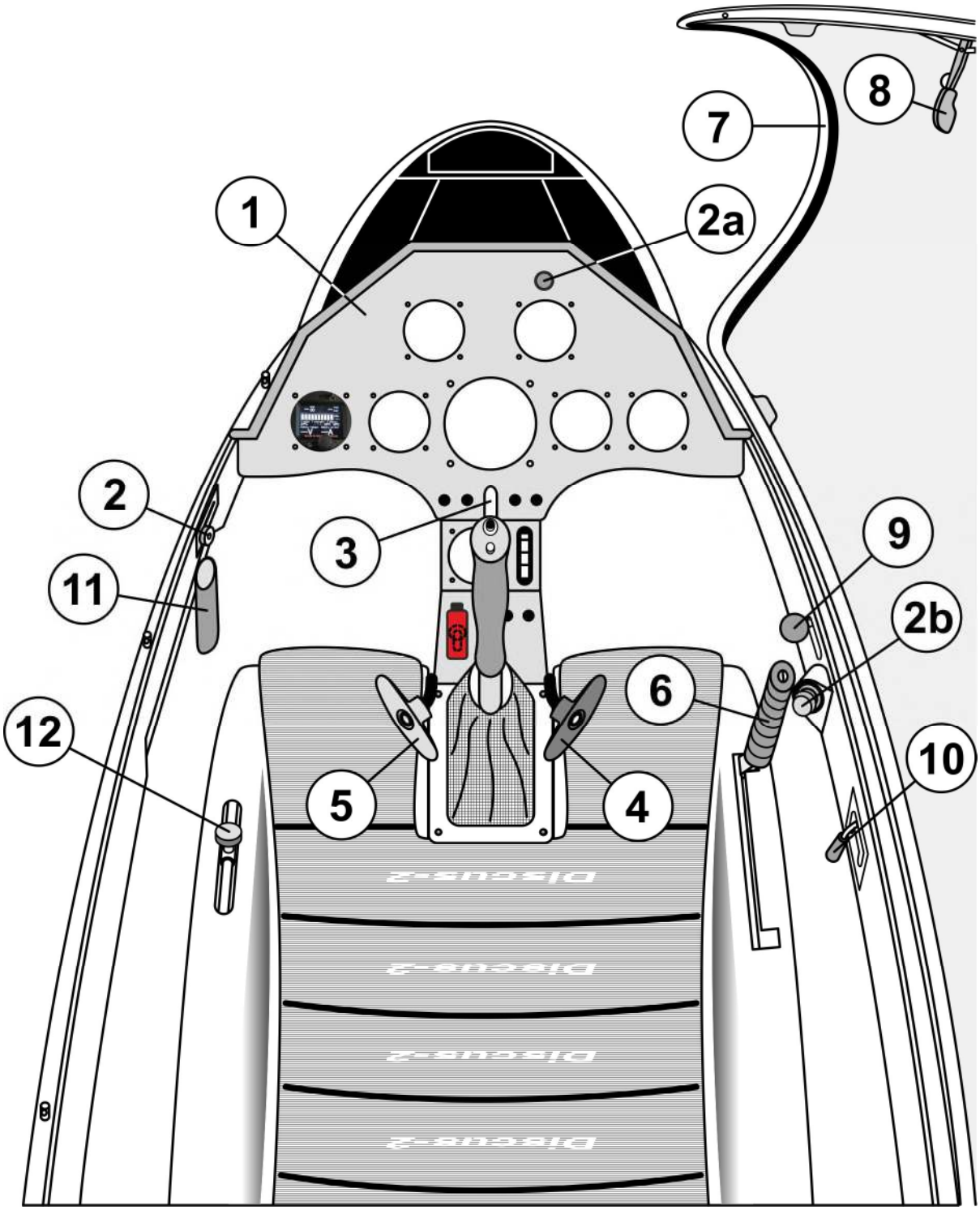

All instruments and control elements are within easy reach of the pilot.

(1) Tilt-up instrument panel

Two quick-fasteners secure the glare shield to the instrument panel.

Panel rises under light pressure with the canopy opened.

(2)(a) Ventilation control fuselage nose (optional left or right installation)

Small knob (with ventilation symbol) on instrument panel

Pulled position	-	Closed
Pushed position	-	Open

(2)(b) Ventilation control cockpit

- Small knurled knob on left inner skin.
  Regulation by freeing, moving and tightening up this knob.

Rearward position	-	Closed
Forward position	-	Opened

Additionally the sliding window or the airscoop in the window may be opened for ventilation.

- Furthermore a bulleye-type ventilator on the starboard side of the cockpit inner skin

Turn clockwise	-	to close ventilator
Turn anticlockwise	-	to open ventilator

CAUTION to ventilation 2(a) and 2(b):

Because the ventilation control in the fuselage nose and the cockpit are in line it is mandatory that for cooling the engine resp. ventilation of the cockpit the ventilation in the fuselage nose and **one** of the cockpit ventilations must be **open**.

(3) Wheel brake

The wheel brake lever is mounted on the control stick.

(4) Rudder pedal adjustment

Black T-shaped handle on the right at the base of the instrument panel console. The rudder pedals may be adjusted on the ground or in the air.

Forward adjustment	-	Release locking device by pulling the handle, push pedals to desired position with the heels and let them engage.
Backward adjustment	-	Pull handle until pedals have reached the desire position. Forward pressure with the heels (not the toes) engages pedals in nearest notch with an audible click.

(5) Control handle for tow release mechanism(s)

Yellow T-shaped handle on the left at the base of the instrument panel console, actuating the aero tow and/or the c/g tow release (if installed).

The aerotow rope / winch cable is released by pulling this handle.

(6) Undercarriage

Retracting	-	Disengage black handle on the right at the seat pan mounting flange, pull it back and lock in rear recess.
Extending	-	Disengage handle, push it forward and lock in front recess.

(7) Canopy

The one-piece plexiglas canopy hinges sideways on flush fittings. Make sure that the cable restraining the open canopy is properly hooked up.

(8) Canopy locking and jettisoning lever

Red lever situated on the canopy frame on the left.

Forward position - Canopy locked

For Canopy opening swing red locking lever backward (about 90°) up to its stop and swing canopy sideways fully open.

(9) Canopy detachment

Sliding black knob on cockpit inner skin on the right.

Forward position - Canopy locked

To remove the canopy, slide knob backward.

(10) Control knob for dumping water ballast from wing tanks and fin tank
(fin tank is optional)

Black ball-shaped knob in the middle of the cockpit inner skin on the right.

Forward position	-	Valves closed
Backward position	-	Valves open

The knob is locked in the rearward position by swinging it downwards into the recess.

(11) Airbrakes lever

Blue handle on the port side of the cockpit.

Forward position	-	Closed and locked
Pulled back approx. 40 mm (1.6 in.)	-	Unlocked
Pulled fully back	-	Fully extended

(12) Elevator trim

Green knob on the seat pan mounting flange on the port side.

The spring operated elevator trim is gradually adjustable by swinging the green knob slightly inwards, sliding it to the desired position and swinging it outwards to lock.

Forward position	-	Nose heavy
Backward position	-	Tail heavy

(13) Head rest (not illustrated)

The head rest is an integral part of the adjustable seat back.

(14) Parachute rip cord attachment (not illustrated)

Red ring, situated at the front of the fuselage steel tube center frame on the left.

(15) Seat back adjustment (not illustrated)

This is horizontally adjustable on the ground (by means of three notches on either side of the seat pan) to match the pilot's size:
First insert fixed pin on seat back into desired notch, then engage spring-loaded pin on the far side.

Additionally it is resettable in flight (for an upright or reclining position) with the aid of a black knob situated beneath the cockpit inner skin on the right.

More reclining	-	Unlock knob (by moving it downward), pull it back and let it engage in notch nearest to desired position
More upright	-	Unlock knob (by moving it downward), slide it forward and let knob engage

7.3 Instrument panel

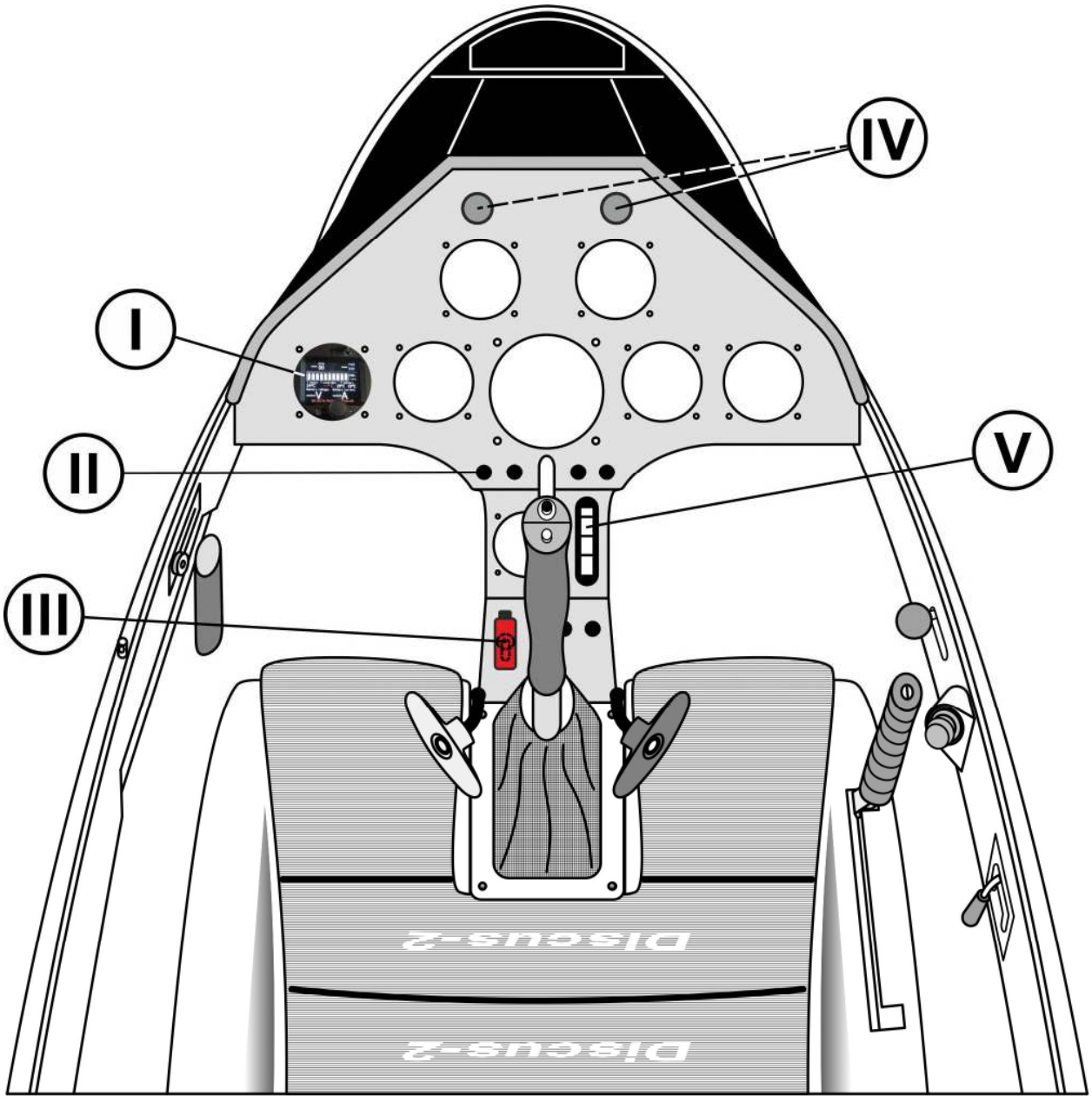

For a description of items No. I - V refer to page 7.3.2.
A description of the instrumentation is not deemed necessary.

I Engine control unit (FCU instrument)

Description refer to FES FCU instrument manual, section 2.1 (page 4), 4 (page 7), 5 (page 7), 6 (page 9), 7, 8, 9 (page 26 and 27) and Flight Manual page 9.2.

II Main switch avionic
(automatic circuit breaker 7.5 A)

The current for the avionic is fed from the tail battery or from both engine batteries if there is no tail battery.

III Power switch

The power switch consist of two parts: A red guard which protects the rocker switch.

- Red guard up and Rocker switch up - Engine system activated

- Red guard down
  rocker switch is automatic pushed
  in the OFF position - Engine system deactivated

IV Ventilation knob control fuselage nose (optional left or right installation)

Pushed - open
Pulled - closed

V Outside air temperature indicator

When carrying water ballast, the outside air temperature (OAT) must not drop below 2 °C (36 °F).

NOTE:

The sensor for the OAT is located in the gear box.

7.4 Undercarriage

The main wheel of the Discus-2cFES is retractable and features a brake. A pneumatic tail wheel is installed.

The extension / retraction process of the undercarriage is described on page 7.2.3.

For a technical description of the retractable undercarriage including wheel brake refer to section 1 of the Maintenance Manual.

7.5 Seat and restraint system

The seat pan is bolted to mounting flanges provided on either side of the cockpit.

A seat back with integrated head rest, adjustable in flight for an upright or reclining position, is standard.

The lap straps are anchored to the seat pan. The shoulder straps are attached to the steel tube center frame.

A list of approved restraint systems is found in section 7.1 of the Maintenance Manual.

7.6 Static pressure and Pitot pressure system

Static pressure sources

a) Static pressure ports are on either side of the fuselage tail boom, 0.8 m / 31.5 inc. forward of the base of the fin (in the horizontal plane) and 0.15 m / 5.9 in. below the fuselage-to-wing fillet (to be used for airspeed indicator etc).

b) Option for further instruments (except ASI):
Special multi probe near the top of the fin

Pitot pressure source

Pitot pressure probe (special multi probe) near the top of the fin.

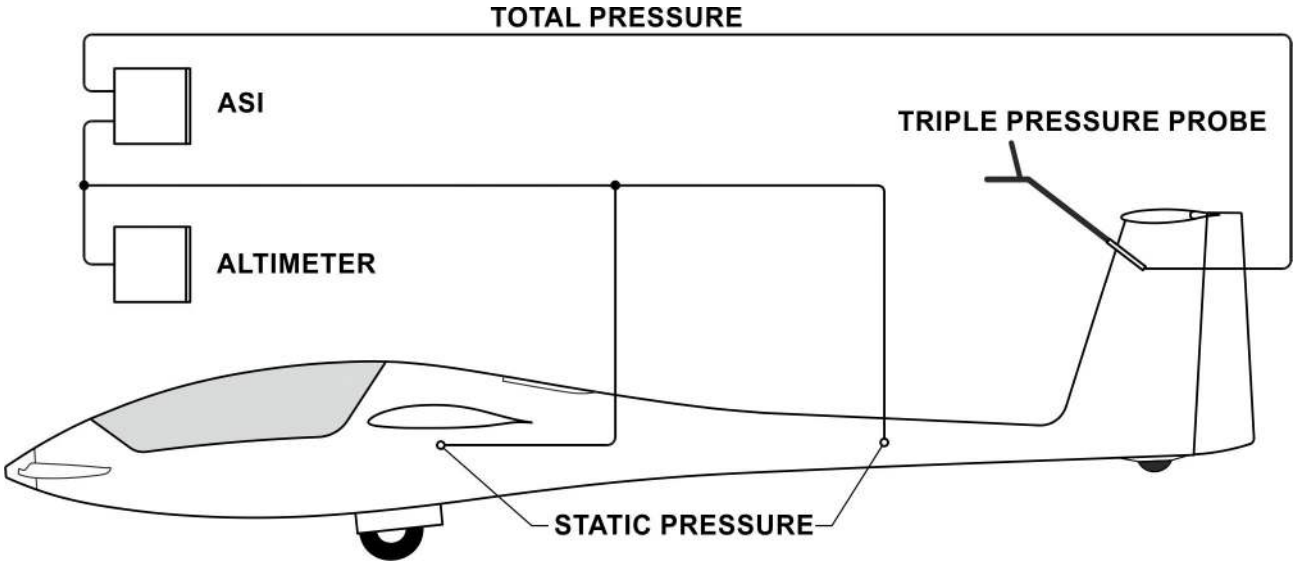

7.7 Airbrake system

Double-panel Schempp-Hirth type airbrakes are employed on the upper wing surface. They open smoothly and are very effective – only a small change in trim is perceptible.

When unlocked, the airbrakes might get slightly sucked out by their spring-loaded cover strips, which in turn may then oscillate within their travel, causing some rattling and / or banging.
This is immediately stopped by further extending the airbrakes. The control of the aircraft is not affected.

With airbrakes extended, the indicated stalling speed is – depending on all-up mass and c/g position – about 5 km/h higher (3 kt, 3 mph).
See also page 5.2.2.

A view of the airbrakes system is found in the Maintenance Manual.

7.8 Baggage compartment

Although an enclosed baggage compartment is not provided, soft objects (like jackets etc.) may be deposited on the removable panel (covering the control linkage) behind the main spar stubs, as the head rest obstructs the access opening to a large extent.

CAUTION:

Do not close the ventilation intakes for the motor controller in the removable panel in front of the main spar.

Such baggage, however, must be taken into account when determining the permissible load on the seat.

7.9 Water ballast system(s)

Wing tanks

A metal rod connects the operating knob in the cockpit to a torsional drive (in the fuselage center) which, on rigging the inboard wing panels, automatically hooks up to torque tubes actuating the wing tank dump valves. These tubes are rotated to their “closed” position by spring force.
The operating knob in the cockpit runs in a gate and can be locked in the extreme positions.

For notes on how to fly with water ballast refer to section 4.5.6.

For water ballast loading tables refer to page 6.2.5 and the following.

A view of the wing water ballast system is provided on page 7.9.2.

Fin tank (option)

A steel cable connects the torsional drive in the fuselage center to the dump valve of the fin tank – hence the knob on the cockpit controls all tanks.

A description on how to use the fin tank is found on page 4.5.6.3 and the following.

For a view of the water ballast system in the fin refer to page 7.9.3.

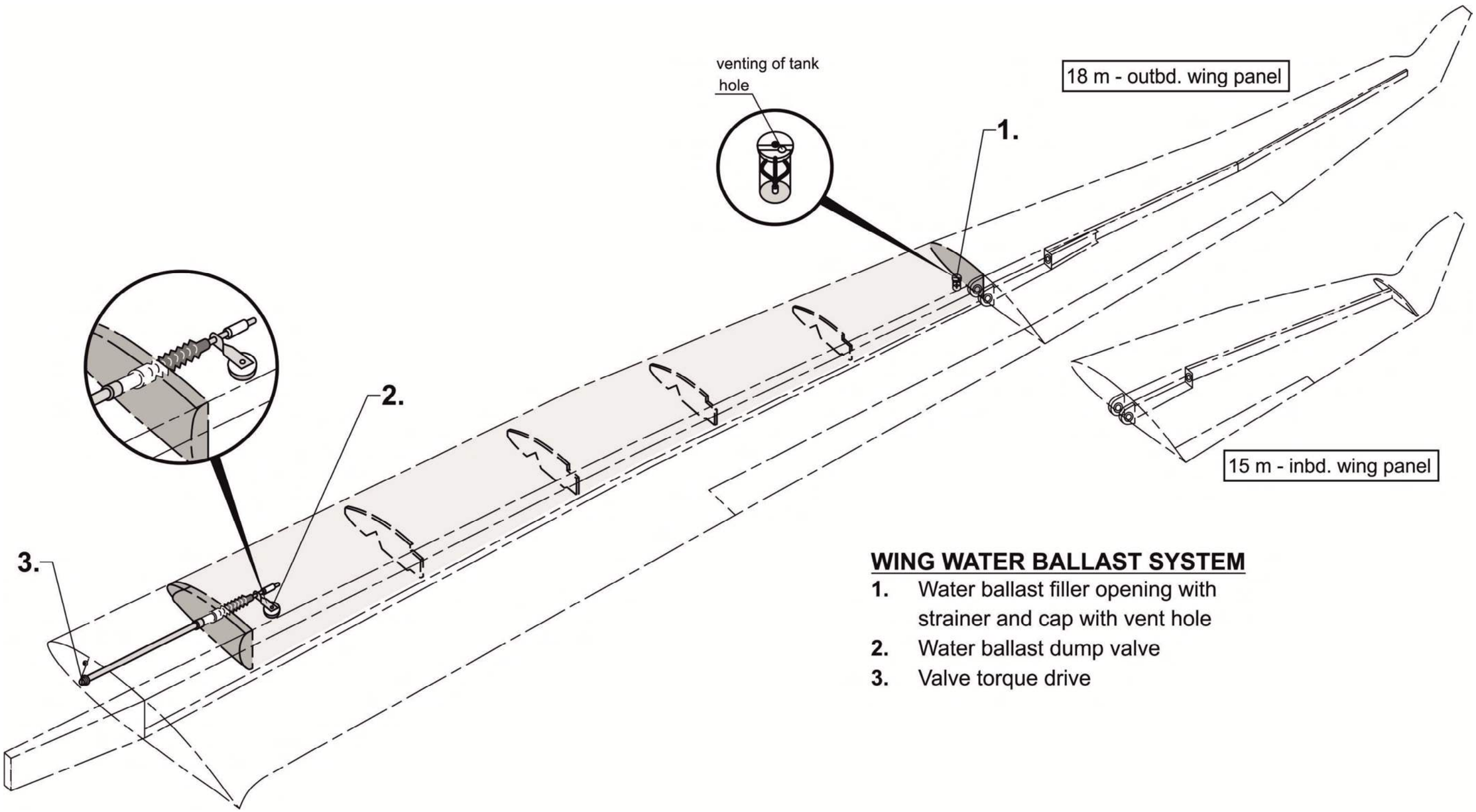

WING WATER BALLAST SYSTEM

1. Water ballast filler opening with strainer and cap with vent hole
2. Water ballast dump valve
3. Valve torque drive

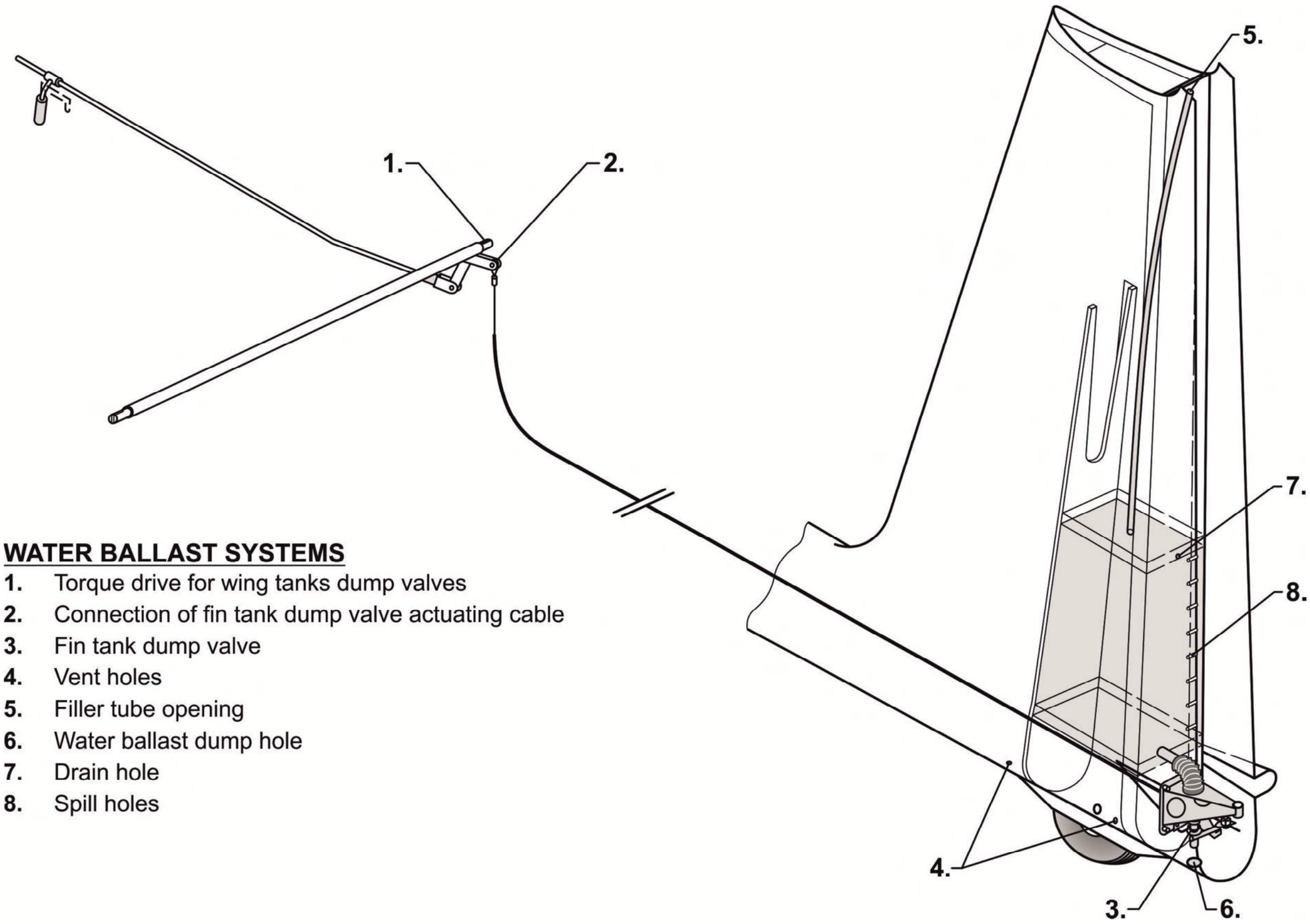

WATER BALLAST SYSTEMS

1. Torque drive for wing tanks dump valves
2. Connection of fin tank dump valve actuating cable
3. Fin tank dump valve
4. Vent holes
5. Filler tube opening
6. Water ballast dump hole
7. Drain hole
8. Spill holes

7.10 Power plant system

The engine with its two-blade folding propellers is installed in the fuselage nose. The engine batteries are positioned in the battery compartment in the aft fuselage refer to page 7.12.3.

A engine control unit (FCU instrument) mounted in the instrument panel combines a number of functions necessary to operate the power plant system – a description of this unit is given on page 7.3.2 and the following.

The only other controls required for operating the power plant are the power switch with the safety cover.

For instructions on how to operate the power plant refer to page 4.5.3.5 and the following.

7.11 Engine battery system

Both engine battery packs are positioned in the battery compartment in the aft fuselage. Both battery packs are fixed with mounting brackets.

Drain holes are provided at the bottom of the aft corners of the battery compartment.

Indication of battery capacity

Battery voltage and the remaining engine run time are displayed on the engine control unit (FCU instrument). For a description refer to page 7.3.2.

7.12 Electrical system

Gliding avionics

When operated in the plane sailplane configuration, the minimum instrumentation prescribed does not require an electrical power source.

Additional equipment is to be wired to the power supply via a fuse and must comply with the manufacturer's instruction of the relevant instrument. See also wiring plan shown on page 7.12.2.

Power for the avionics is supplied by:

- one battery on upper end of fin
  or
- both engine batteries

An automatic safety breaker controls the power sources for the gliding avionics.

Power plant

The power for the engine in the fuselage nose is provided by both batteries in the engine battery compartment in the aft fuselage see drawing shown on page 7.12.3.

The engine control instrument (FCU instrument) is connected to the power of the avionic as shown on page 7.12.2.

This power source is controlled with the Power switch ON and its voltage is displayed by the FCU instrument.

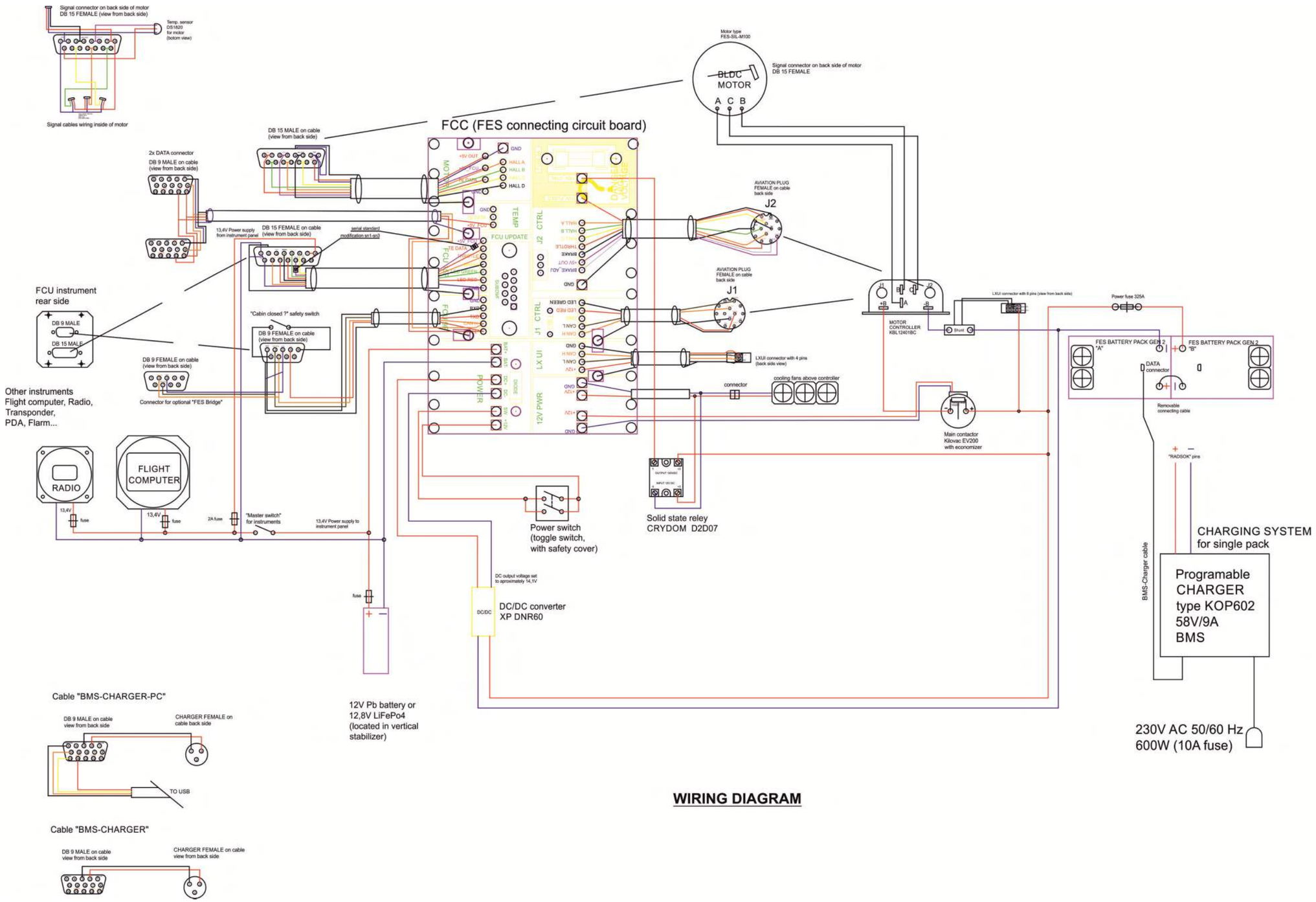

WIRING DIAGRAM

POWER PLANT INSTALLATION

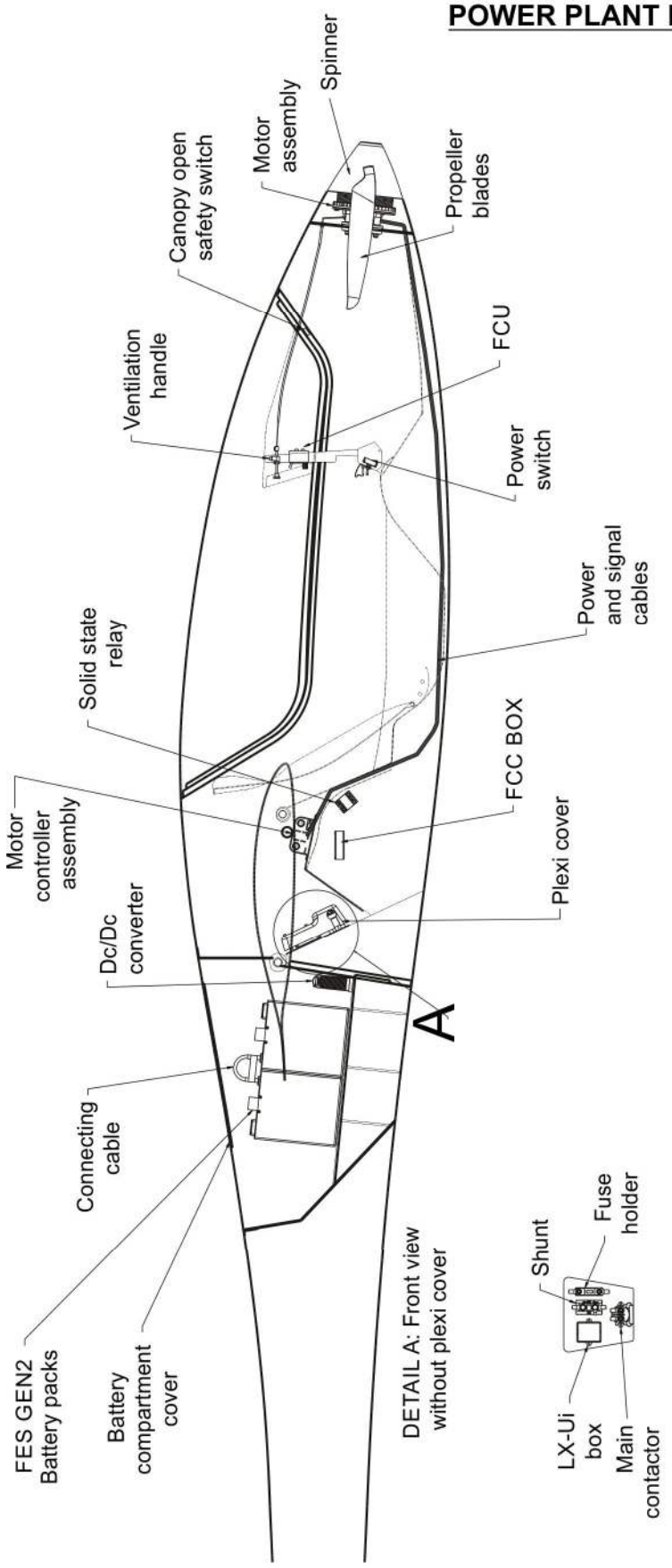

7.13 Miscellaneous equipment

Removable ballast (option)

A mounting provision for removable ballast (trim ballast weights) is provided in the fuselage nose.

The trim ballast weights (lead plates) are secured in place by a wing nut.

For information on how to alter the minimum seat load refer to section 6.2.

Oxygen system

Attachment points for the mounting brackets of an oxygen bottle are provided on the fuselage skin behind the canopy frame (for the neck) and further aft on the cover over the spar stubs (for cylinder body).

Drawings can be ordered for the installation of an oxygen system.

CAUTION:

After installation of an oxygen system it is necessary to re-establish the empty mass c/g position of the sailplane. This is to ensure that the center of gravity is still within the permitted range.

A list of approved instruments is found in the Maintenance Manual.

ELT-installation

The Installation of an Emergency Locator Transmitter is possible in the following places and must comply with the relevant instructions provided by Schempp-Hirth Flugzeugbau GmbH:

- on a panel covering the main spar stubs
- on a GFR-part left of the gear box

A list of approved instruments is found in the Maintenance Manual.

Section 8

8. Aircraft handling, care and maintenance

8.1 Introduction

8.2 Aircraft inspection periods

8.3 Aircraft alterations or repairs

8.4 Ground handling / road transport

8.5 Cleaning and care

8.1 Introduction

This section contains manufacturer's recommended procedures for proper ground handling and servicing of the Discus-2cFES. It also identifies certain inspection and maintenance requirements which must be followed if these models are to retain that "new plane" performance and dependability.

CAUTION:

It is wise to follow a planned schedule of lubrication and preventative maintenance based on climate and flying conditions encountered – see section 3.2 of the Maintenance Manual.

8.2 Aircraft inspection periods

For details concerning the maintenance of the aircraft refer to the Discus-2cFES Maintenance Manual.

Airframe maintenance

Under normal operating conditions no airframe maintenance work is required between the annual surveys, except for the routine greasing of the spigots and ball bearings of the wing and tailplane attachment fittings.

Should the control system become heavy to operate, lubricate those places in the fuselage and in the wing panels where plain bearings are used (e.g. undercarriage, airbrake actuating linkage).

Cleaning the wheel(s) and the tow release(s) depends on the accumulation of dirt.

Rudder cables

After every 200 flying hours and at every annual check, the rudder cables are to be inspected at the point were they feed through the S-shaped guides in the pedals, especially at the point of maximum pedal adjustment.

If the rudder cables are damaged, worn or corroded, they must be replaced.

It is permissible for individual strands of the cables to be worn up to 25 %.

Power plant maintenance

Propeller

Maintenance work on the propeller is to be conducted after every 50 hours of engine time or at least once every year and must comply with the instructions given in the FES DIS P1 102 PROPELLER manual, section 9, see the Flight Manual on page 9.2 too.

Engine

Maintenance work on the engine is not required refer to FES DIS 100 MOTOR manual, section 6, and the Flight Manual on page 9.2.

Power plant

Maintenance work on the power plant is to be conducted after every 50 hours of engine time or at least once every year and must comply with the instructions given in the FES Maintenance manual, section 5.3, see the Maintenance Manual Discus-2cFES on page 9 too.

8.3 Aircraft alterations or repairs

8.3.1 Alterations

Every alteration on the approved model must be certified.

8.3.2 Repairs

During checks i.e. the daily check according section 4.3 see for any sign of a change in the condition of the aircraft, such as cracks in the surface, holes, delamination in the CFRP/GFRP structure etc.

If there is any uncertainty whatsoever regarding the significance of damage discovered, the aircraft should get always a release to service from a qualified inspector.

There is no objection to minor damage – which does not affect the airworthiness in any way – being repaired on site.

“Repair Instructions” are given from the holder of the type certificate which can be found in the appendix of the Maintenance Manual.

8.4 Ground handling / road transport

a) Towing / Pushing

When towing the aircraft behind a car, a tail dolly should always be used to avoid unnecessary tailplane vibration on the fittings – especially in tight turns.
When pushing the aircraft by hand, it should not be pushed at its wing tips, but as near to the fuselage as possible.

b) Hangaring

The aircraft should always be hangared or kept in well ventilated conditions.
If it is kept in a closed trailer, there must be adequate ventilation.
The water ballast tanks must always be left completely empty.
The aircraft must never be subjected to loads whilst not in use, especially in the case of high ambient temperatures.

c) Tie-down

In the case of aircraft remaining rigged permanently, it is important that the maintenance program includes rust prevention for the fittings on the fuselage, wings and tailplane.
Tie-down kits common in trade may be used to anchor the sailplane.
Dust covers should be regarded as essential for the aircraft.

d) Preparing for road transport

As the wing panels have a thin airfoil section, it is important that they are properly supported, i.e. leading edge down, with support at the spar stubs and at the outer portion in cradles of correct airfoil section.
The fuselage can rest on a broad cradle just forward of the u/c doors and on its tail wheel/skid.
The horizontal tailplane should be kept leading edge down in two cradles of correct airfoil section or placed horizontally on a padded support.
On no account should the tailplane be supported by its fittings in the trailer.

8.5 Cleaning and care

Although the surface coating of a complete aircraft is robust and resistant, always take care of a perfect surface.

For cleaning and caring the following is recommended:

- Clean the surface (especially the leading edge of wing, horizontal stabilizer and fin) with clear water, a sponge and chamois leather.
- Do not use too often rinsing additives common in trade.
- Polish and polishing materials may be used.
- Petrol and alcohol may be used momentarily only, thinners of all kinds are not recommended.
- Never use chlorine hydrogen (i.e. Tri, Tetra, Per etc.).

NOTE:

Polish's, wax and additives containing silicone should not be used, because this might cause additional effort in the case of repairs of the coating.

- The canopy should be cleaned with a plexiglas cleaner (e.g. “PLEXIKLAR” or similar) and only if necessary, with warm water.

  The canopy should be wiped down only with a soft clean chamois leather or a very soft material as used for gloves.

  Never rub the canopy when it is dry!

- The aircraft should always be protected from the wet. If water has found a way in, the components should be stored in a dry environment and turned frequently to eliminate the water.

- The aircraft should not be exposed unnecessarily to intense sunlight or heat and should not be subjected to continual loads in a mechanical sense.

WARNING:

All external portions of the sailplane exposed to sunlight must be painted white – with the exception of the areas for the registration and anti-collision markings.
Colours other than white can lead to the CFRP/GFRP overheating in direct sunlight, resulting in an insufficient strength.

Section 9

9. Supplements

9.1 Introduction

9.2 List of inserted supplements

9.1 Introduction

This section contains the appropriate supplements necessary to safely and efficiently operate the powered sailplane when equipped with various optional systems and equipment not provided with the standard aircraft.

9.2 List of inserted supplements

Date of insertion	Document No.	Title of inserted supplements
January 2016	v1.70	FES FCU instrument manual, section 2.1, 4 (page 7),5 (page 7), 6 (page 9), 7, 8 , 9 (page 26 and 27)
January 2016	v1.17	FES BATTERY PACK GEN2 manual, section 2 to 4 (page 14, 16) 5, 6 (page 18) and 7
February 2017	v1.2	FES DIS P1 102 PROPELLER manual, section 2 to 10
January 2016	v1.2	FES DIS M100 MOTOR manual, section 6

NOTE:

The manuals on this page are only valid in the English original version.